NORAC®

UC5™ CAN BUS Spray Height Control System

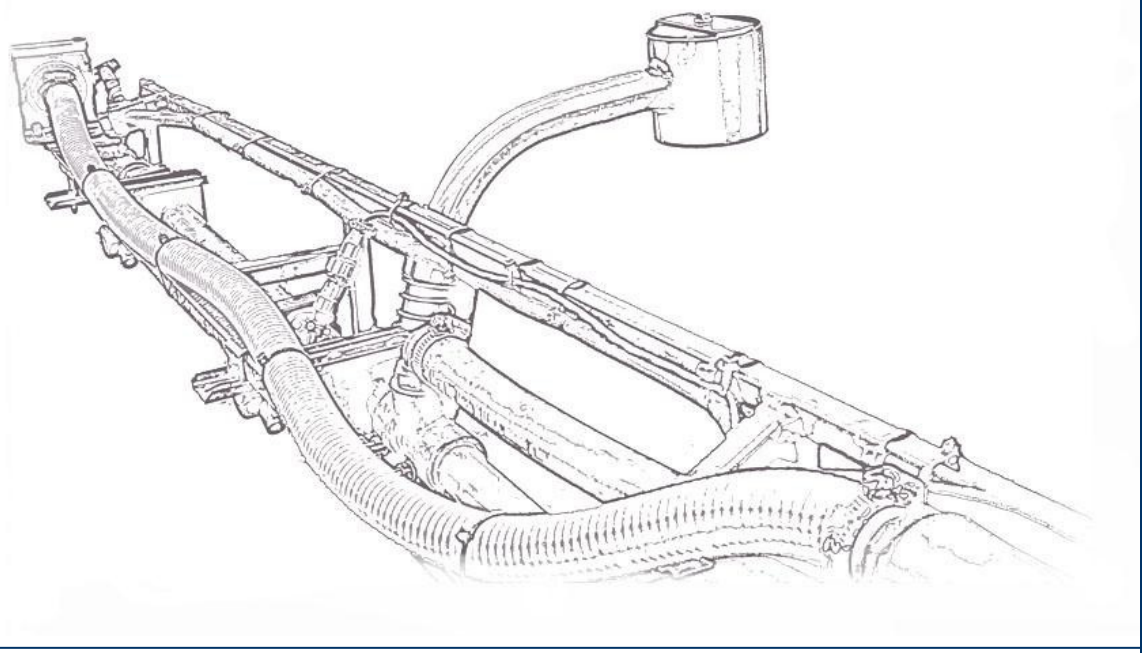

Rogator
('54, '64, '74 & '84 Series and 1386)
Installation Manual

RG04 & RG06

Printed in Canada
Copyright © 2009 by NORAC Systems International Inc.
Reorder P/N: UC5-BC-RG04-INST Rev M (Rogator '54, '64, '74 & '84 Series and 1386)

NOTICE: NORAC Systems International Inc. reserves the right to improve products and their specifications without notice and without the requirement to update products sold previously. Every effort has been made to ensure the accuracy of the information contained in this manual. The technical information in this manual was reviewed at the time of approval for publication.

Contents

1 Introduction 1
2 Technical Specifications 2
3 General UC5 System Layout 3
4 Kit Parts 4
5 Pre-Install Checklist 12
6 Ultrasonic Sensor Installation 13
7 Roll Sensor Installation 18
8 Module Installation 21
9 Connecting the Sensors to the CANbus 27
10 Hydraulic Installation 28
11 Software Setup 34
12 Cable Drawings 35

1 Introduction

Congratulations on your purchase of the NORAC UC5 Spray Height Control System. This system is manufactured with top quality components and is engineered using the latest technology to provide operating reliability unmatched for years to come.

When properly used the system can provide protection from sprayer boom damage, improve sprayer efficiency, and ensure chemicals are applied correctly.

Please take the time to read this manual completely before attempting to install the system. A thorough understanding of this manual will ensure that you receive the maximum benefit from the system.

Your input can help make us better! If you find issues or have suggestions regarding the parts list or the installation procedure, please don't hesitate to contact us.

⚠ Important

Every effort has been made to ensure the accuracy of the information contained in this manual. All parts supplied are selected to specially fit the sprayer to facilitate a complete installation. However, NORAC cannot guarantee all parts fit as intended due to the variations of the sprayer by the manufacturer.

Please read this manual in its entirety before attempting installation.

2 Technical Specifications

CAN ICES-3(A)/NMB-3(A)

This device complies with part 15 of the FCC Rules. Operation is subject to the following two conditions: (1) This device may not cause harmful interference, and (2) this device must accept any interference received, including interference that may cause undesired operation.

This equipment has been tested and found to comply with the limits for a Class A digital device, pursuant to part 15 of the FCC Rules. These limits are designed to provide reasonable protection against harmful interference when the equipment is operated in a commercial environment. This equipment generates, uses, and can radiate radio frequency energy and, if not installed and used in accordance with the instruction manual, may cause harmful interference to radio communications. Operation of this equipment in a residential area is likely to cause harmful interference in which case the user will be required to correct the interference at their own expense.

This Class A digital apparatus complies with Canadian ICES-003.

Pursuant to EMC Directive – Article 9, this product is not intended for residential use.

Table 1: System Specifications

Supply Voltage (rated)	12VDC
Supply Current (rated)	10A
Hydraulic Pressure (maximum)	3300 psi
Baud Rate	250 kbps
Clock Frequency (maximum)	96 MHz
Solenoid Valve PWM Frequency	300 Hz
Ultrasonic Sensor Transmit Frequency	50 kHz
Operating Temperature Range	0°C to 80°C

3 General UC5 System Layout

Figure 1 illustrates the general layout of the UC5 system components:

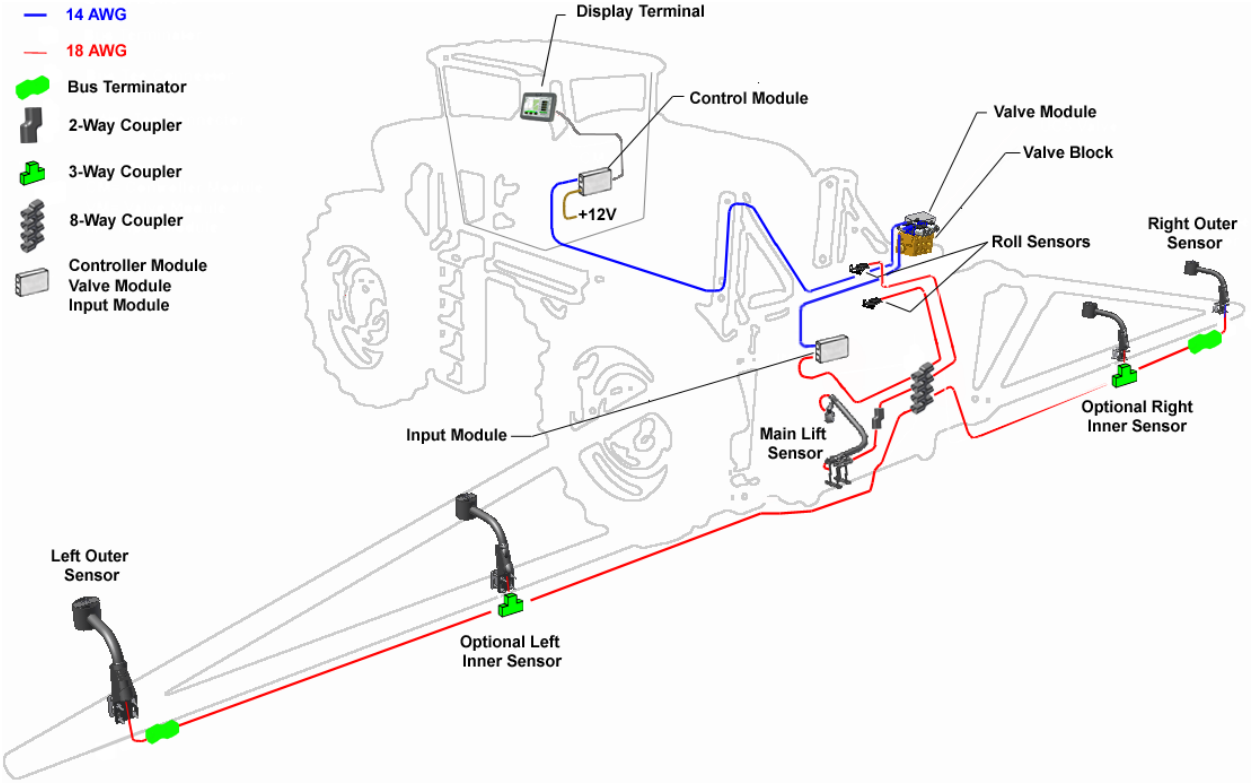

Figure 1: General UC5 System Layout

4 Kit Parts

4.1 Kit Overview

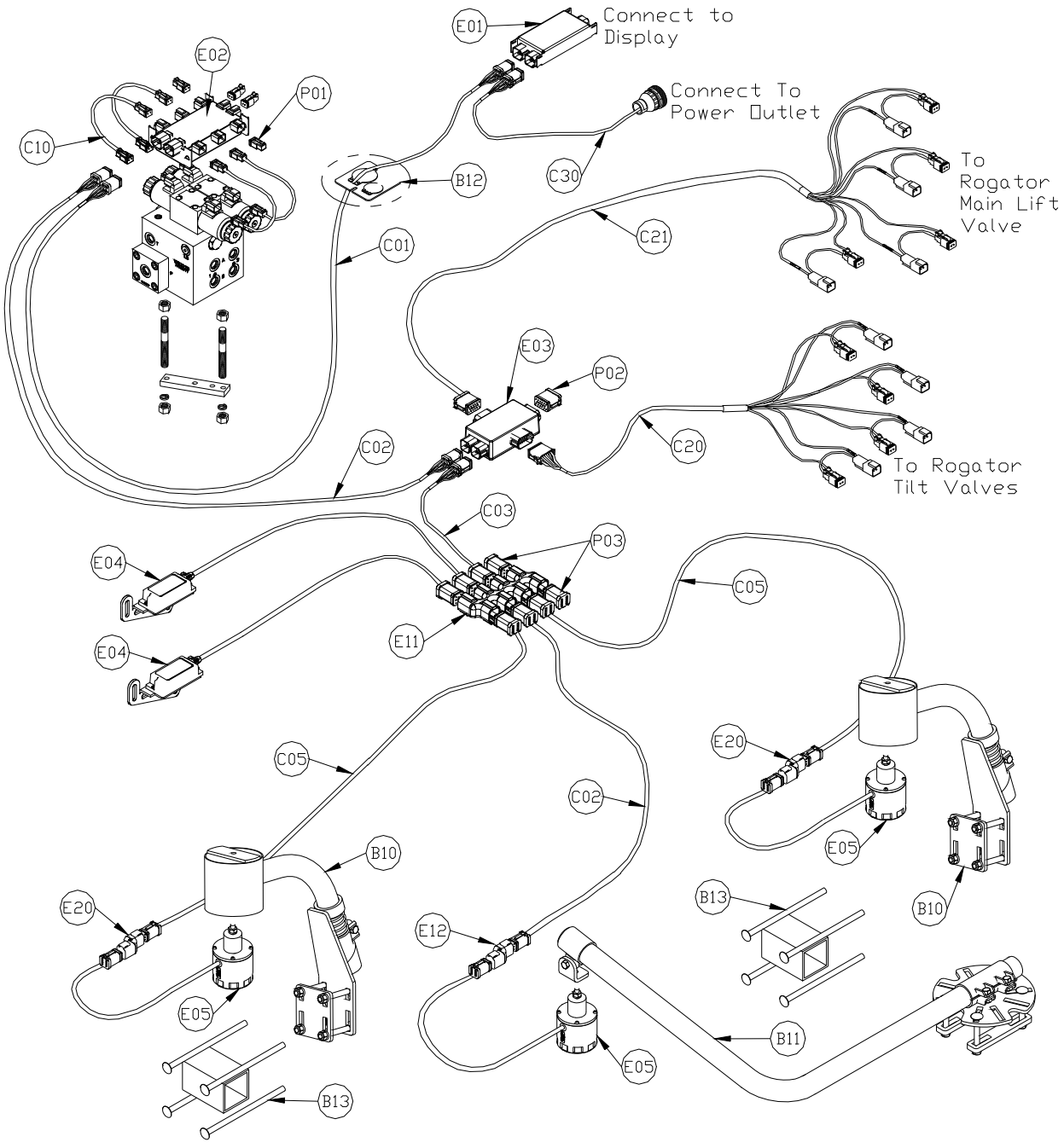

Figure 2: RG04/RG06 System Parts

4.2 Hydraulic Plumbing

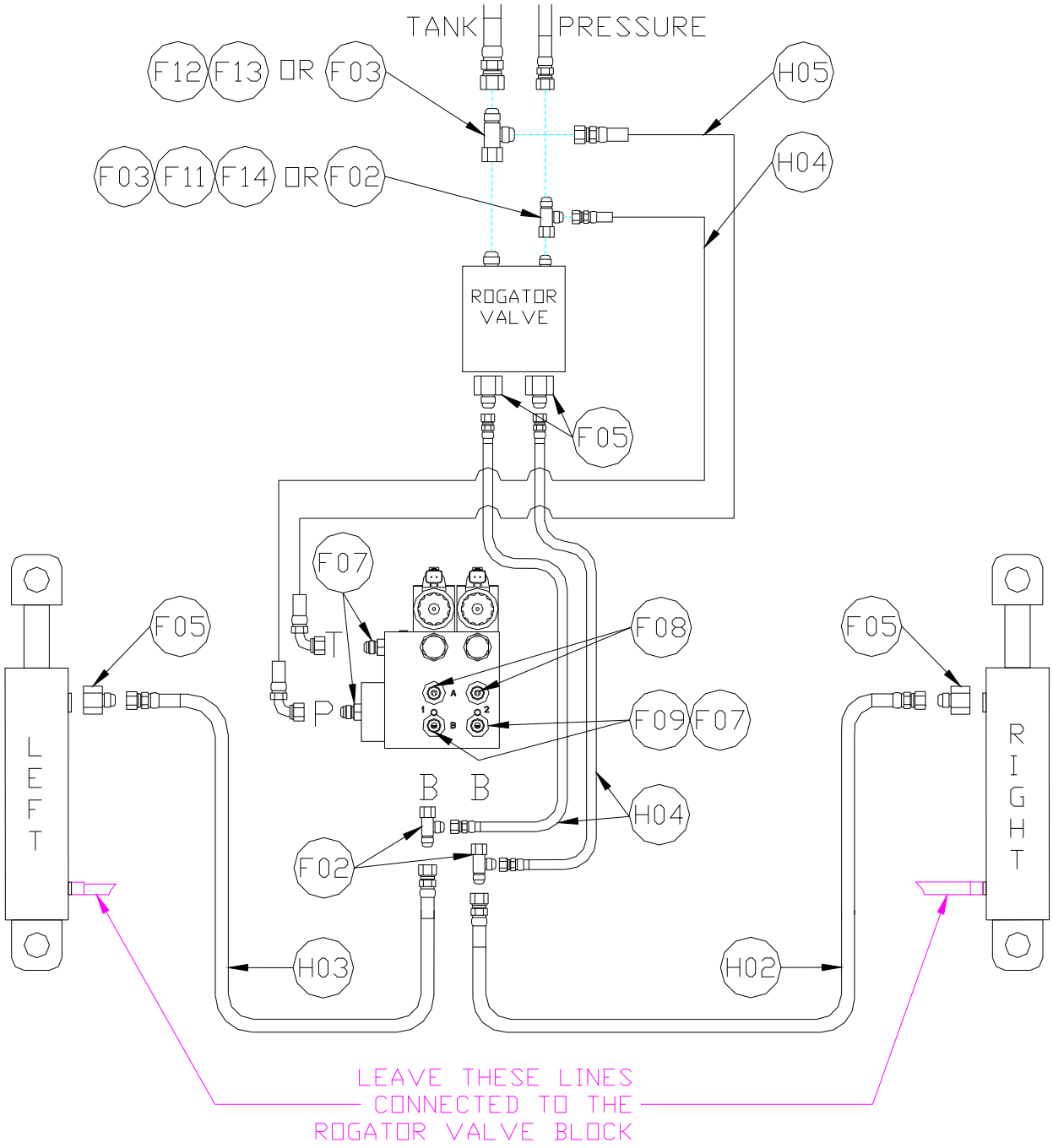

Figure 3: RG04/RG06 Hydraulic Plumbing

4.3 List of Parts

This manual covers installation using both JIC and flat faced o-ring fittings. Before starting the installation compare the NORAC kit hydraulics to the sprayer hydraulics to be sure the correct fitting style is supplied. When performing the hydraulic install make sure you follow the section for the correct style of fittings. Some fittings may not be used for the installation.

Item	Part Number	Name	Quantity
B05	44706-01	KIT CABLE TIE BLACK 10 PCS 21 IN 150 PCS 7.5 IN	1
B10	44728	MOUNTING BRACKET COMPLETE UC4 BREAKAWAY EXTENDED	2
B11	44743	MOUNTING BRACKET MAIN LIFT SENSOR UC4 PLUS	1
B12	44701-01	KIT ACCESS PANEL CAB	1
B13	44724	BRACKET BREAKAWAY SPACER 2IN WITH BOLTS	2
C01	43220-10	CABLE UC5 NETWORK 14 AWG 10M	1
C02	43220-01	CABLE UC5 NETWORK 14 AWG 1M	2
C03	43220-03	CABLE UC5 NETWORK 14 AWG 3M	1
C05	43210-20	CABLE UC5 NETWORK 18 AWG 20M	2
C10	43230-04	CABLE UC5 VALVE 2PIN DT TO 2PIN DT	4
C20	43240-01	CABLE UC5 INTERFACE TILT DT	1
C21	43240-07	CABLE UC5 INTERFACE MAIN DT (WITH AUX 1 & 2)	1
C30	43250-04	CABLE UC5 BATTERY AMP FUSED	1
E01	43710	UC5 CONTROLLER MODULE	1
E02	43720	UC5 VALVE MODULE	1
E03	43732	UC5 INPUT MODULE PASS THRU	1
E04	43741	UC5 ROLL SENSOR VER. 2	2
E05	43750	UC5 ULTRASONIC SENSOR	3
E11	43765	UC5 NETWORK COUPLER 8-WAY	1
E12	43764	UC5 NETWORK COUPLER 2-WAY	1
E20	43764T	UC5 NETWORK COUPLER 2-WAY WITH TERMINATOR	2
M02	UC5-BC-RG04-INST	MANUAL INSTALLATION UC5 ROGATOR ('54, '64, '74 & '84 SERIES AND 1386)	1
P01	106034	UC5 NETWORK 2 PIN PLUG	4
P02	106602	UC5 NETWORK 12 PIN PLUG (A-KEY)	1
P03	105882	UC5 NETWORK 6 PIN PLUG	2
V01	44963D	VALVE BLOCK ASSEMBLY 2 STATION CC/LS PROP DT 4 BOLT	1

4.4 RG04 Hydraulics (For sprayers with JIC fittings)

Item	Part Number	Name	Quantity
H02	44863-04	HOSE ASSEMBLY 122R2-06 135 IN L 6FJX 6FJX	1
H03	44863-05	HOSE ASSEMBLY 122R2-06 175 IN L 6FJX 6FJX	1
H04	44863-06	HOSE ASSEMBLY 122R2-06 40 IN L 6FJX 6FJX90	3
H05	44863-17	HOSE ASSEMBLY 122R2-06 32 IN L 6FJX90 8FJX	1
H10	44865-25	HYDRAULICS FITTING KIT - RG2	1

Fitting Name Example:

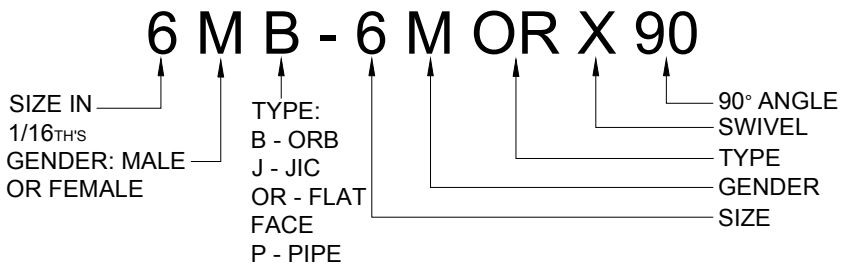

Hydraulic Fitting Kit Details (P/N: 44865-25):

Item	Part Number	Name	Quantity	Picture
F02	103839	TEE ADAPTER - 6FJXR 6MJT	3	
F03	104632	TEE ADAPTER - 8FJXR 8MJT	2	
F05	104517	MALE TO FEMALE ADAPTER - 12FJ 6MJ	4	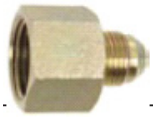
F06	44934	MALE TO FEMALE ADAPTER - 12MJP MACHINED PORT	2	
F07	103312	MALE ADAPTER - 6MB 6MJ	4	
F08	104369	PLUG - 6MBP	4	
F09	44928	ORIFICE INSERT .047 IN ONE WAY	2	
F11	104189	MALE ADAPTER - 10MB 8MJ	1	
F12	104629	TEE ADAPTER - 12FJXR 12MJT	1	
F13	104628	MALE TO FEMALE ADAPTER - 12FJ 8MJ	1	
F14	104386	MALE TO FEMALE ADAPTER - 8FJ 6MJ	1	

4.5 RG06 Hydraulics (For sprayers with Flat Faced O-ring fittings)

Item	Part Number	Name	Quantity
H02	44863-25	HOSE ASSEMBLY 122R2-06 136 IN L 6FORX 6FORX	1
H03	44863-47	HOSE ASSEMBLY 122R2-06 175 IN L 6FORX 6FORX	1
H04	44863-48	HOSE ASSEMBLY 122R2-06 40 IN L 6FORX90 6FORX	3
H05	44863-46	HOSE ASSEMBLY 122R2-06 40 IN L 6FORX90 8FORX	1
H10	44865-54	HYDRAULIC FITTING KIT - RG6	1

Hydraulic Fitting Kit Details (P/N: 44865-54):

Item	Part Number	Name	Quantity	Picture
F02	104586	TEE ADAPTER - 6FORXR 6MORT	3	
F03	104885	TEE ADAPTER - 8FORXR 8MORT	2	
F05	105327	MALE TO FEMALE ADAPTER - 12FORX 6MOR	4	
F06	106136	PLUG - 12MORP	2	
F07	44917	MALE ADAPTER - 6MB 6MOR	4	
F08	104369	PLUG - 6MBP	2	
F09	44928	ORIFICE INSERT .047 IN ONE WAY	2	
F11	106137	MALE ADAPTER - 10MB 8MOR	1	
F12	105338	TEE ADAPTER - 12FORXR 12MORT	1	
F13	105732	MALE TO FEMALE ADAPTER - 8MOR 12FORX	1	
F14	104884	MALE TO FEMALE ADAPTER - 6MOR 8FORX	1	

4.6 Alternate Cabling

Some Rogator sprayers may require different cabling depending on the connectors used near the valve block. Please refer to the table below for ordering alternate cabling from NORAC. A complete list of alternate cabling can be found in the UC5 Generic Cable Ordering Guide (P/N: UC5-BC-CABLE-GUIDE) which is available at norac.ca.

Item	Part Number	Name	Connector	Picture
C20	43240-01	CABLE UC5 INTERFACE TILT DT	Deutsch DT	
C21	43240-07	CABLE UC5 INTERFACE MAIN DT (WITH AUX 1 & 2)	Deutsch DT	
C20	43240-13	CABLE UC5 INTERFACE TILT GP	Weatherpack	
C21	43240-14	CABLE UC5 INTERFACE MAIN GP	Weatherpack	
C20	43240-15	CABLE UC5 INTERFACE TILT MP	Metripack 280	
C21	43240-16	CABLE UC5 INTERFACE MAIN MP	Metripack 280	

Important

Do not use high speed power tools/drills when installing hardware.

Important

The use of dielectric grease is not recommended on any NORAC electrical connections.

Important

To ensure all stainless steel hardware does not gall or seize apply a light coating of the supplied Permatex Anti-seize grease to all threaded parts upon installation. Permatex Anti-seize lubricant is preferred, but other similar anti-seize products may be used.

5 Pre-Install Checklist

The pre-install checklist is necessary to check the existing sprayer functionality before the installation.

1. Unfold the sprayer over a flat, unobstructed area (i.e. no power lines…etc.).
2. Ensure all boom-fold operations are functional (place a check mark in boxes below).
3. Bring engine to field-operational RPM and record below.
4. Record the time (seconds) it takes for a full stroke for all boom functions. To ensure repeatable measurements, take the average of 3 trials.
5. Not all sprayers will have the functions listed below in **Figure 4**.

⚠ Important

Ensure the boom has sufficient travel so it does not contact the ground during these tests.

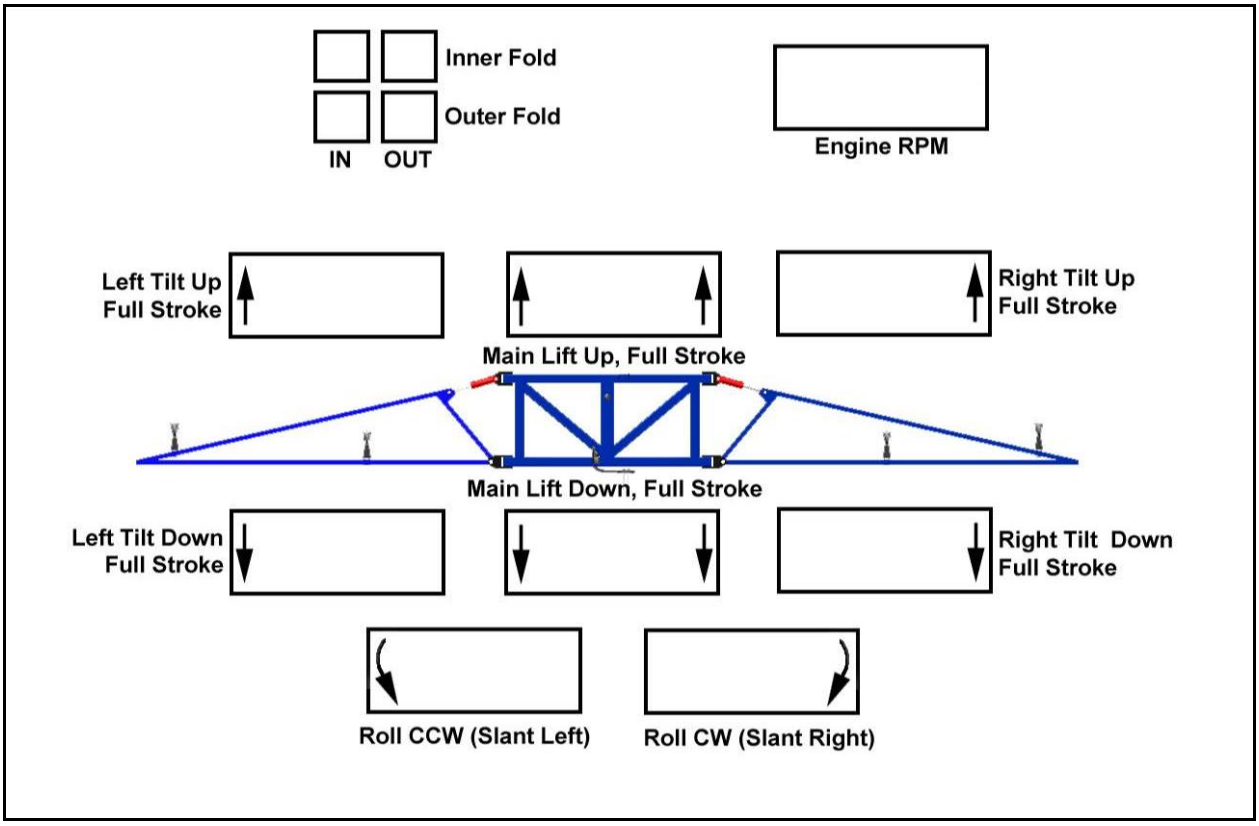

Figure 4: Pre-Install Boom Speeds

6 Ultrasonic Sensor Installation

6.1 Bracket Assembly

Assemble the breakaway sensor bracket as illustrated in **Figure 5**, following the instructions below.

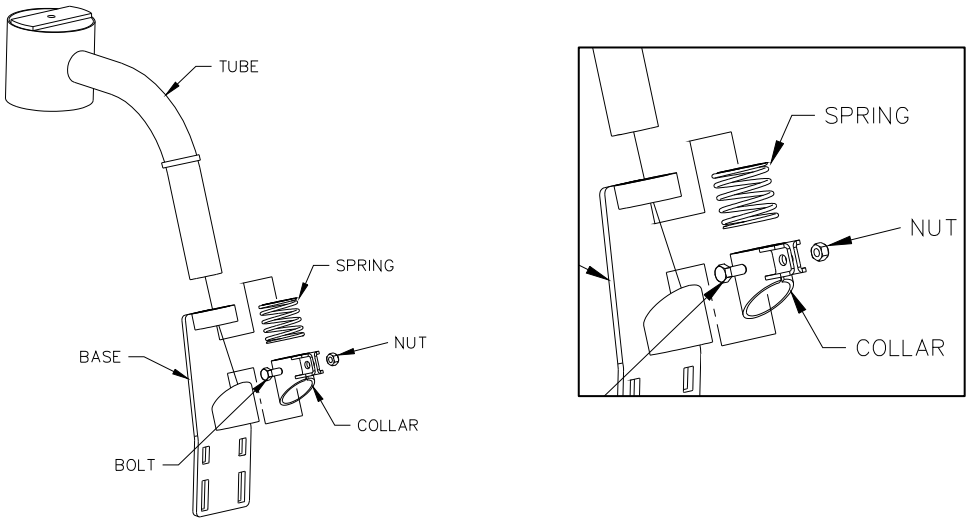

Figure 5: Breakaway Bracket Assembly

1. Compress the spring and insert it together with the collar into the base.
2. Slide the tube through the assembled part.
3. Using the bolt and nut, tighten the collar to the tube with the sensor tube centered.
4. Apply a small amount of grease to the rotating surfaces of the bracket.

6.2 Ultrasonic Sensor Serial Number Arrangement

When installing the UC5 sensors, start with the smallest serial number on the left-hand side, and proceed to the largest serial number on the right hand side. Each UC5 sensor has a serial number stamped on the sensor housing.

Apply a light coating of the supplied Permatex Anti-seize grease to all threaded parts upon installation.

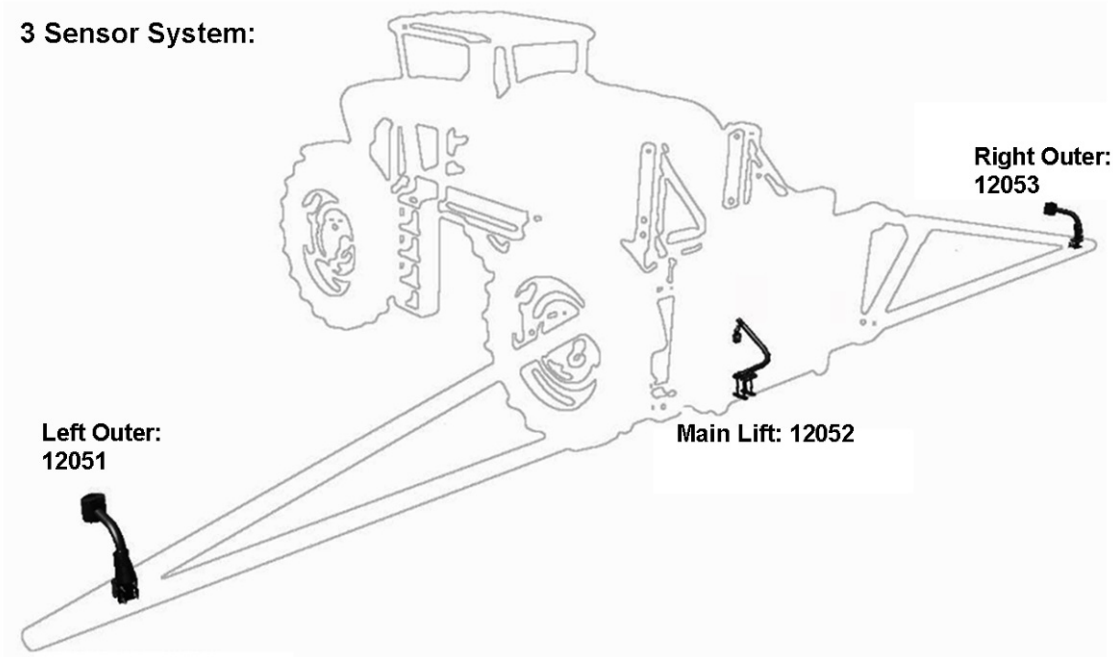

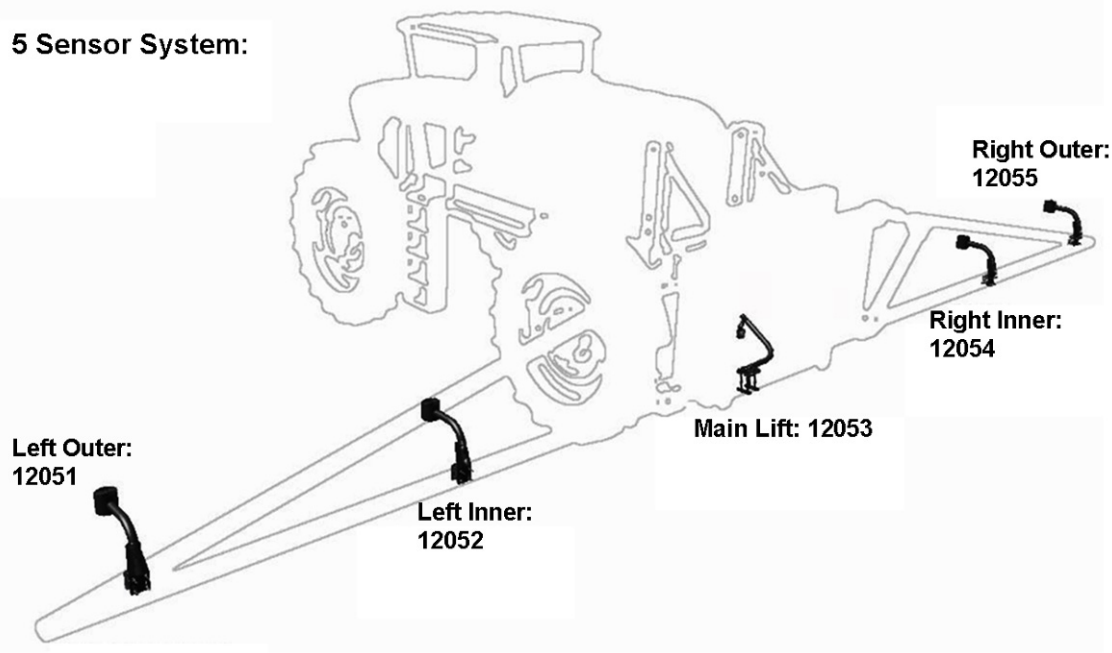

Figure 6: Sensor Serial Number Arrangement

6.3 Ultrasonic Sensor Mounting Guidelines

The following guidelines will ensure optimal sensor performance and prevent sensor measurement error. These rules should be followed for both the wing sensors and the main lift (middle) sensor.

1. In its lowest position, the sensor must be 9 inches (23 cm) or more from the ground **(A)**.

2. The centerline of the acoustic cone should be approximately vertical at normal operating heights **(A)**.

3. The bottom of the sensor must be at least 9 inches in front of the spray nozzles and boom structure **(B)**. (This does not apply for the main lift sensor)

4. The bottom of the sensor must be at least 9 inches above the spray nozzles **(C)**.

5. Ensure there are no other obstructions with a 12 inch (23 cm) diameter circle projected directly below the sensor **(D)**.

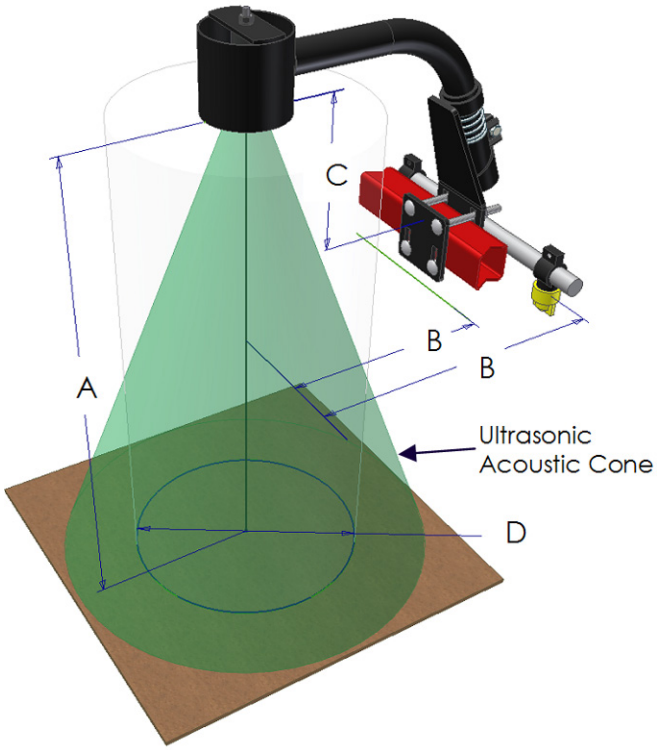

Figure 7: Sensor Mounting Guidelines

6.4 Wing Sensor Installation

1. The sensor bracket should be oriented forward (ahead of the boom).

2. Typically the best mounting location for the wing sensor brackets will be near the end of the boom tips, approximately two feet (60cm) from the end.

3. If the sensor bracket needs to be mounted further forward on the boom, use the spacer bracket (B13) (**Figure 8**).

4. Mount the ultrasonic sensor into the sensor bracket and run the sensor cable through the sensor tube.

⚠ Important

A problem can arise if a sensor is not mounted correctly. It is possible for the sensor to read off of the boom instead of the ground. This may only become apparent once the control system is switched from soil to crop mode.

Also be careful that the sensor bracket does not collide with any other part of the boom when the boom is folded to transport position. If possible, mount the sensor brackets while the booms are folded to ensure they will not cause interference.

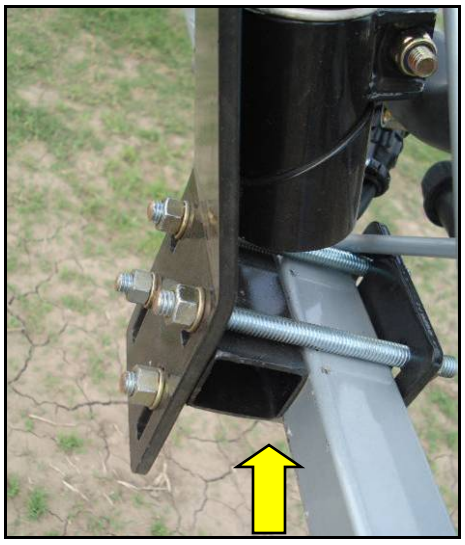

Figure 8: Spacer Bracket Installation

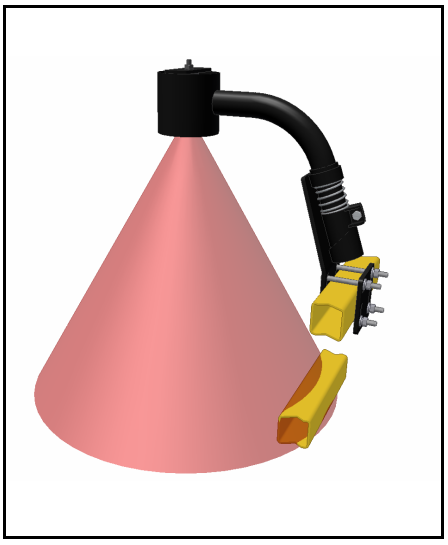

Figure 9: Sensor Reading Off Boom

6.5 Main Lift Sensor Installation

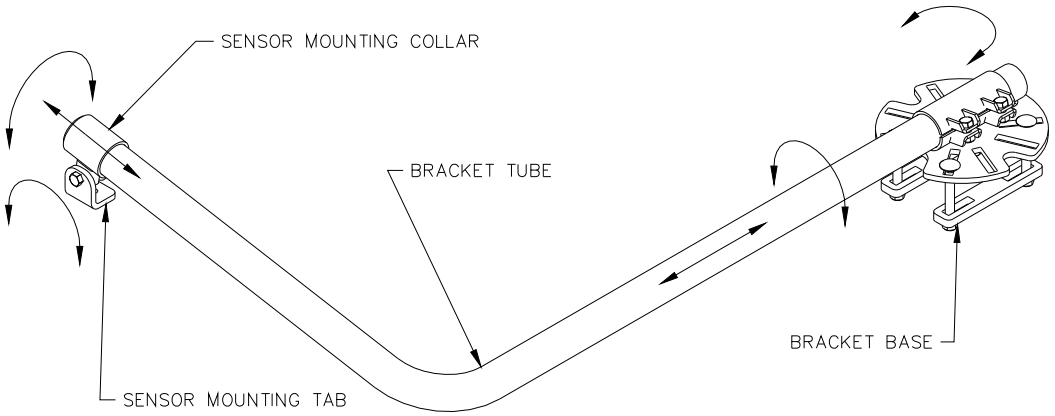

Figure 10: Main Lift Bracket Assembly

1. There are a variety of ways to mount the main lift bracket on most sprayers. The bracket should position the sensor approximately in the center of the sprayer, forward of the boom. An example of this mounting is illustrated in **Figure 11**.

2. Mount the ultrasonic sensor to the main lift bracket. Run the sensor cable down the center of the main lift bracket tube.

Figure 11: Example Mounting of the Main Lift Bracket

⚠ Important

Avoid mounting the main lift sensor over or near a wheel-track. Measurements from the wheel-track do not provide an accurate crop height and will cause measurement and control error.

Ensure the bracket does not collide with any other part of the sprayer throughout the full range of main lift motion.

7 Roll Sensor Installation

7.1 Bracket Assembly

1. Securely mount the roll sensors to the included roll sensor brackets using the #6 machine screws. Tighten screws to 10 in-lbs (1.1 Nm).

2. The orientation of the mounted roll sensor to the roll sensor bracket will depend on the bracket mounting. The roll sensor CANbus connector must be pointing towards the right side of the sprayer (when looking from the rear of the spayer).

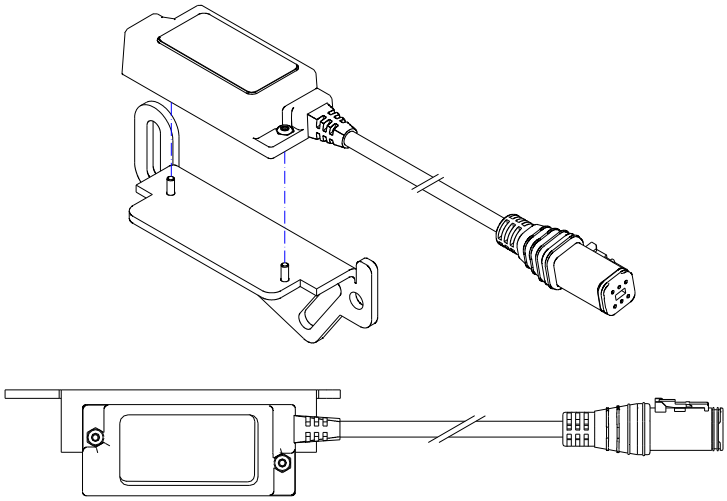

Figure 12: Mounting Roll Sensor to Bracket

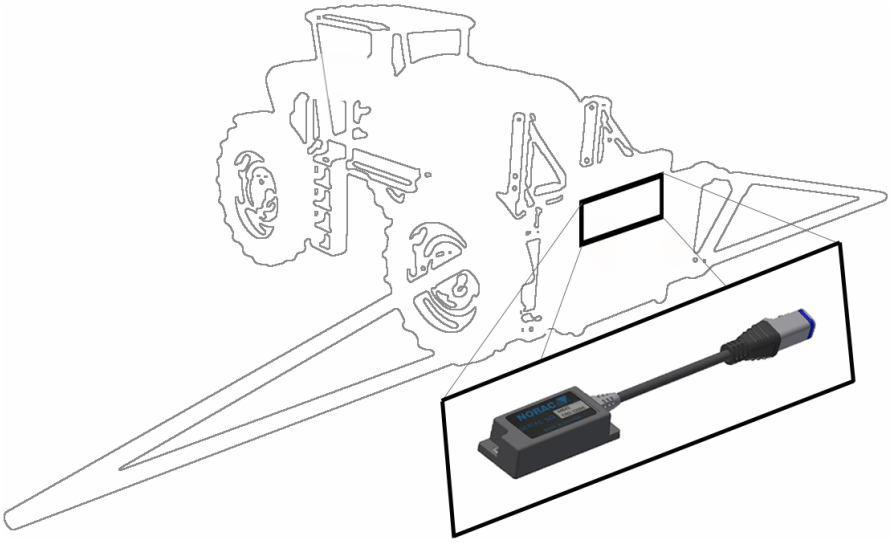

Figure 13: Roll Sensor Orientation - Connector Facing Right Wing

7.2 Roll Sensor Mounting Guidelines: Center Pivot Booms

1. When mounting the roll sensors, mount one to the boom frame and one to the chassis (non-pivoting portion of the sprayer). For optimal performance, minimize the distance between the roll sensors (A) and minimize the height from each roll sensor to the pivot point (B)

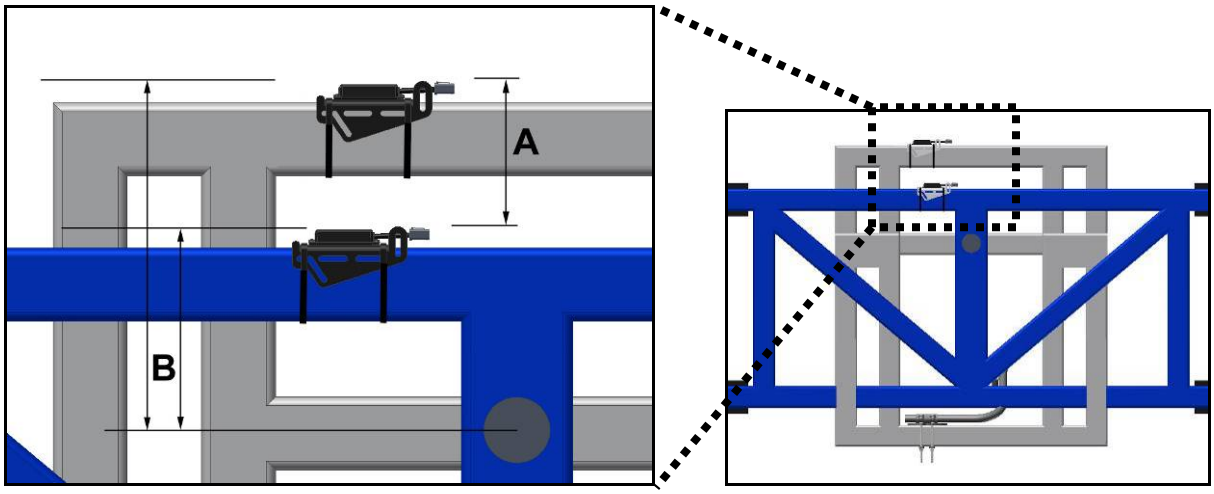

Figure 14: Roll Sensor Mounting on a Center Pivot Suspended Boom

2. Ensure the roll sensors are relatively level when the sprayer boom and chassis are level.

3. Both roll sensor cables should be pointing towards the right hand wing of the sprayer.

4. Ensure both roll sensor cables provide enough slack to allow sufficient boom roll.

5. The chassis roll sensor can also be mounted inverted to minimize the distance between the roll sensors (**Figure 15**).

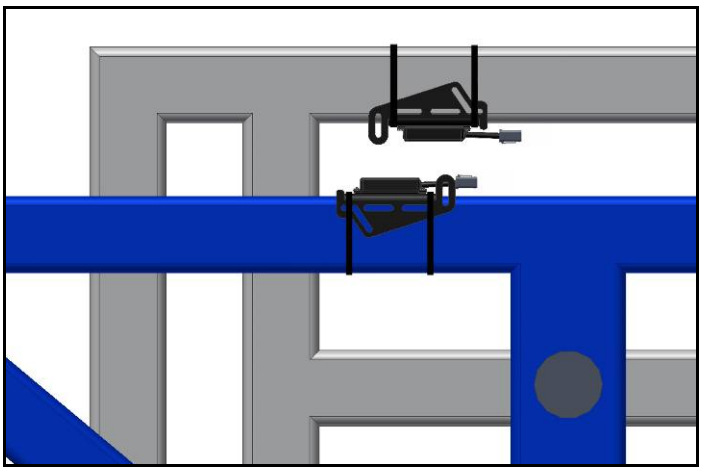

Figure 15: Inverted Chassis Roll Sensor Mounting on a Center Pivot Suspended Boom

7.3 Roll Sensor Mounting on a Rogator Sprayer

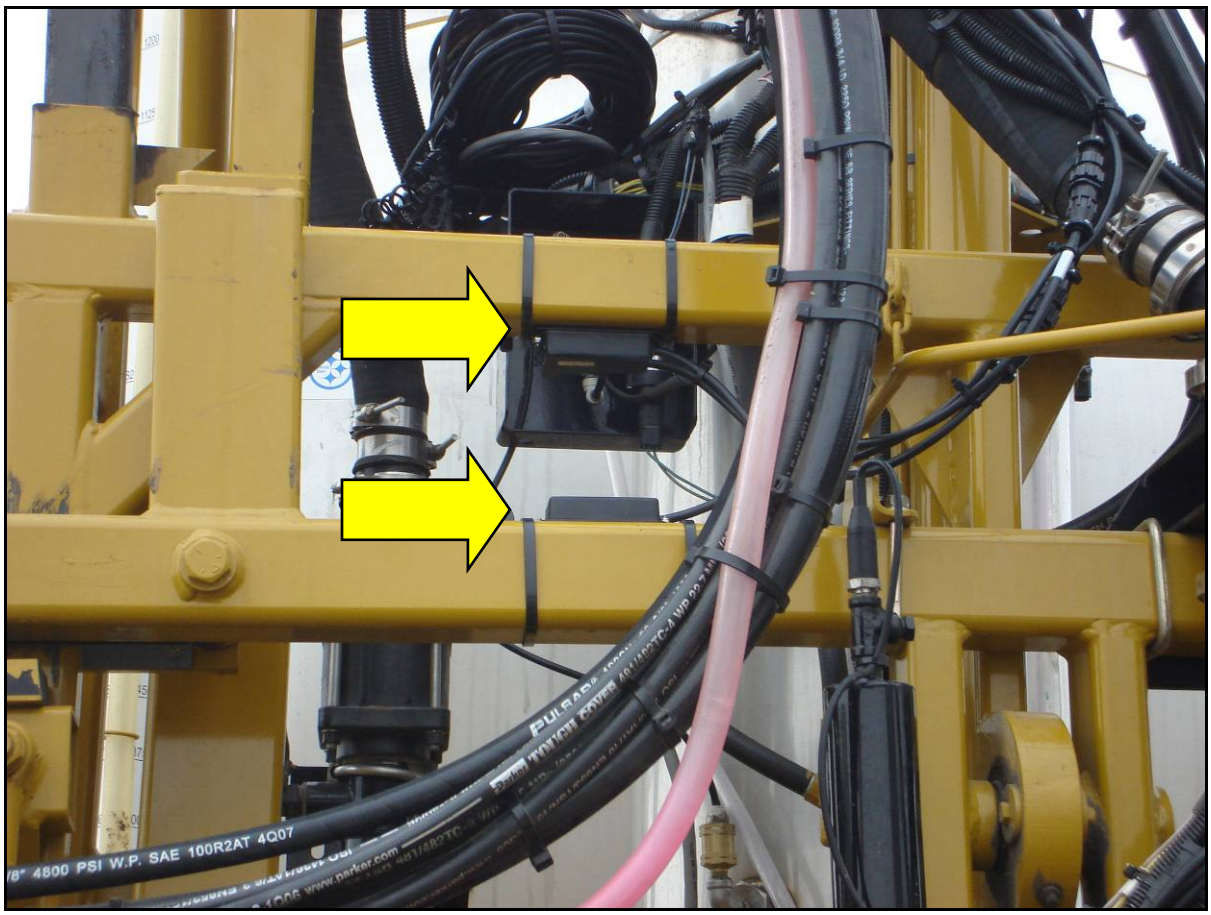

Figure 16: Roll Sensor Mounting (Viewed from the rear of sprayer)

8 Module Installation

An optional module mounting bracket kit is available for purchase from NORAC. The mounting brackets are compatible with control modules and input modules. One kit is needed per module.

Item	Part Number	Name	Quantity
B20	43708	UC5 MOUNTING BRACKET KIT (CONTROL AND INPUT MODULES)	1

8.1 Control Module

1. Refer to **Figure 1** and **Figure 17**.

2. Securely mount the control module (E01) inside the sprayer cab, using screws, cable ties or optional brackets.

3. Connect the display terminal to the control module using the display cable. This cable must be connected to the end of the control module with only one Deutsch connector.

4. Connect the power cable (C30) to one of the two CANbus connectors on the control module. Connect the other end of the power cable to an appropriate power source.

5. Route cable C01 from the other CANbus connector towards the rear of the sprayer.

6. There is an access panel located on the front right corner of the Rogator cab floor. It can be removed to allow cables to be routed to the exterior of the cab. Use this panel to route C01 through the hole of the provided access panel kit (**Figure 17**).

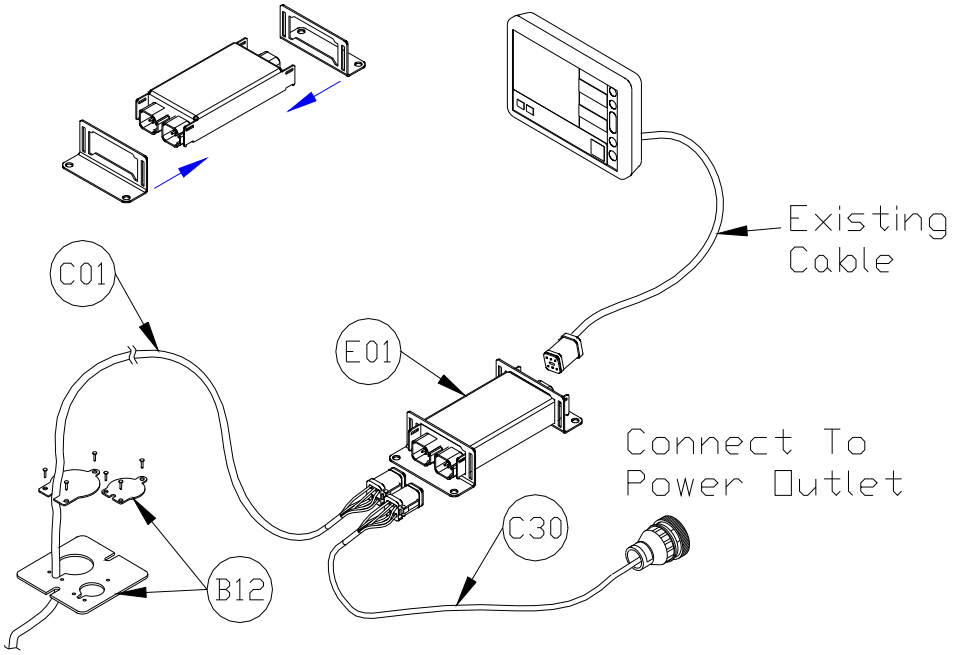

Figure 17: Control Module Mounting

8.2 Valve Module

1. Install the valve module (E02) to the top of the NORAC valve block. Orient the 6-pin Deutsch (CANbus) connectors towards the "P" and "T" ports with the label facing up.

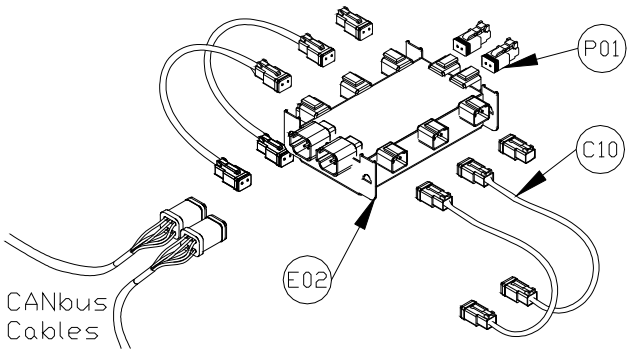

Output Number	Normal Function
1	Left Up
2	Left Down
3	Right Up
4	Right Down
5	Option 1
6	Option 2
7	Option 3
8	Option 4

Figure 18: Valve Module

2. Verify the valve coil connectors are oriented vertically (**Figure 19**).

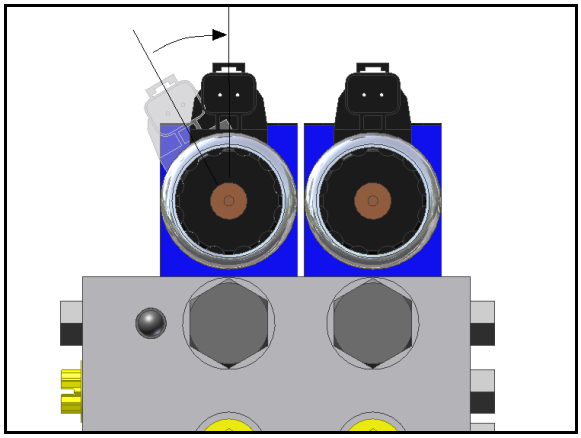

Figure 19: Align Coils

3. Place the valve module between the valve coils. Slide a valve mounting bracket over the connectors of the valve module and the valve coil connectors. This may require flexing the plastic bracket slightly (**Figure 20**).

4. Ensure the bracket is pushed over the connectors far enough to allow the clips to engage behind the valve connectors.

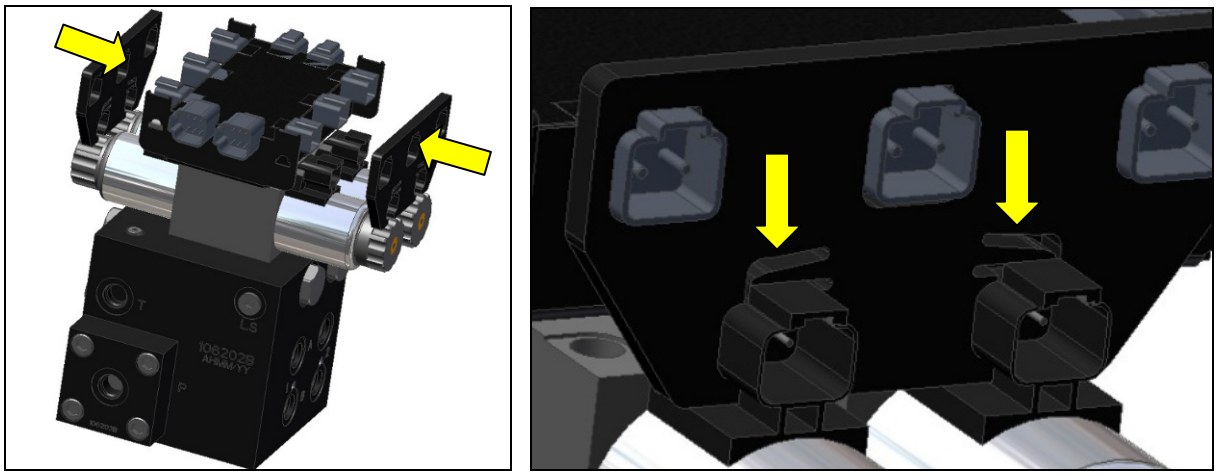

Figure 20: Valve Module Bracket Installation

5. Connect the valve module CANbus to cable C01 from the control module. Route cable C02 from the other CANbus connector to the input module.

6. With the valve module securely mounted to the valve block, connect the valve cables (C10), to the valve coils. Insert the 2-pin plugs (P01) into the unused 2-pin connectors on the valve module.

7. Connect the temperature probe to the valve block using the supplied 3/8" x 1/2" hex bolt.

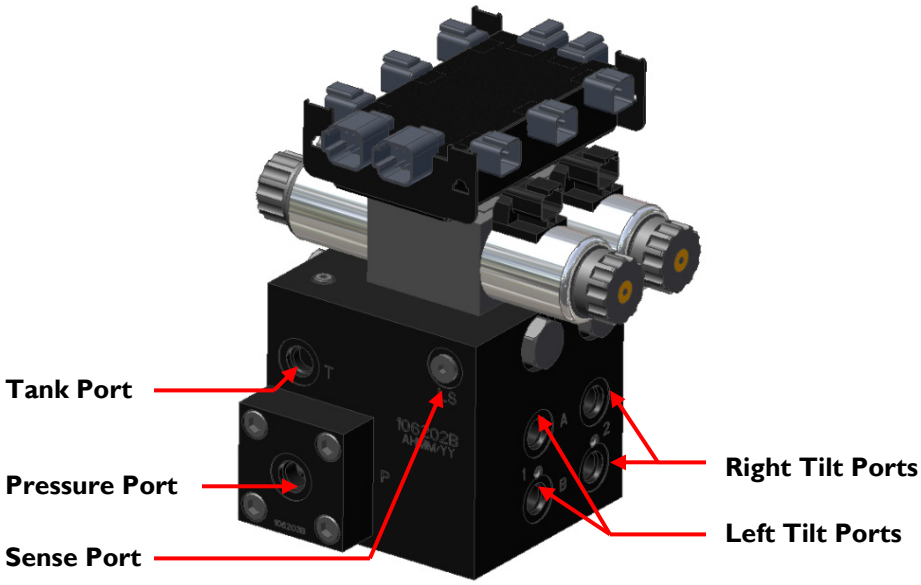

Figure 21: Valve Module - Valve Coil Connections

8.3 Input Module

1. Install the input module (E03) on the sprayer near the NORAC valve block. Secure it to the boom using cable ties or optional brackets.

2. Connect the free end of the CANbus cable (C02) from the valve module to the input module.

3. Insert the 12 pin plug (P02) into the *OEM 3* connector on the end of the input module

4. Connect the 12 pin connector on the tilt interface cable (C20) to the *Thru 2* connector on the side of the input module.

5. Insert the connectors on the other end of C20 into the tilt connectors.

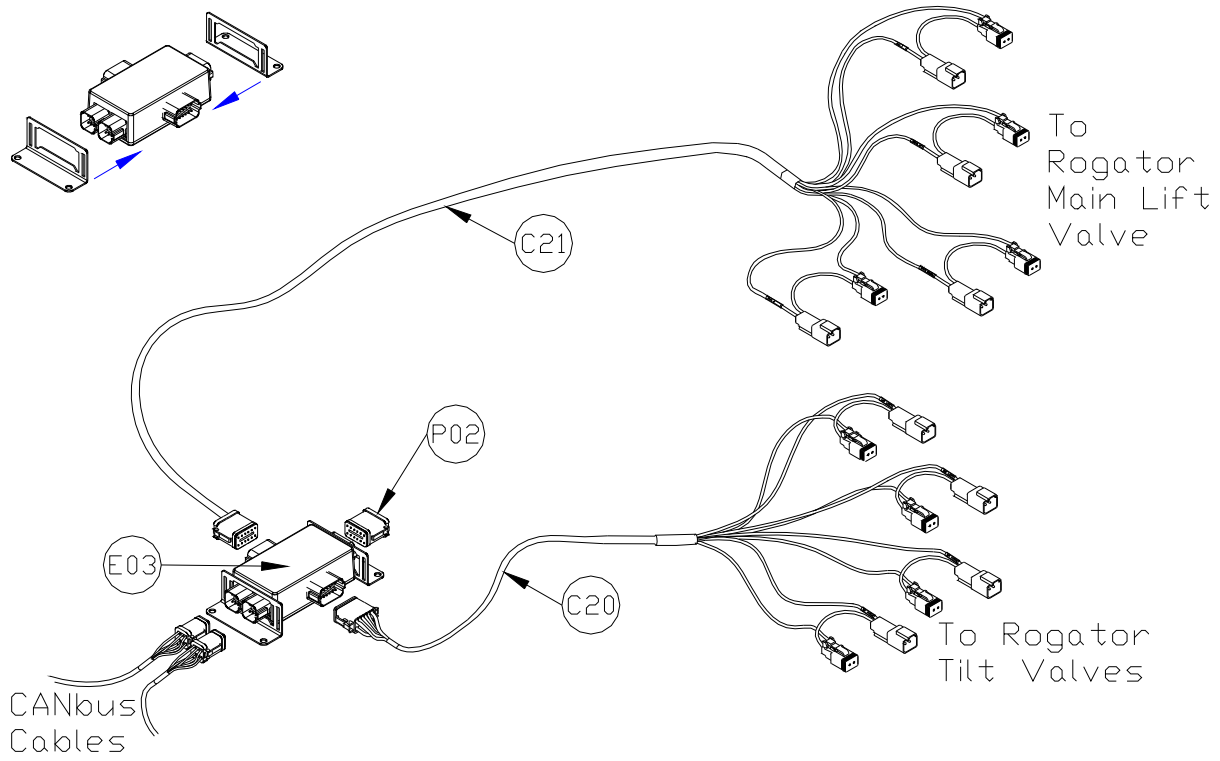

Figure 22: Input Module Connections

6. Connect the 12 pin connector on the main lift interface cable (C21) to the *Thru 1* connector on the side of the input module.

7. Insert the connectors on the other end of C21 into the main lift connectors on the sprayer solenoids.

⚠ Important

Alternate cabling is available from NORAC if the connectors on C20 and C21 do not match the valve block. Refer to Section 4.6 for ordering information.

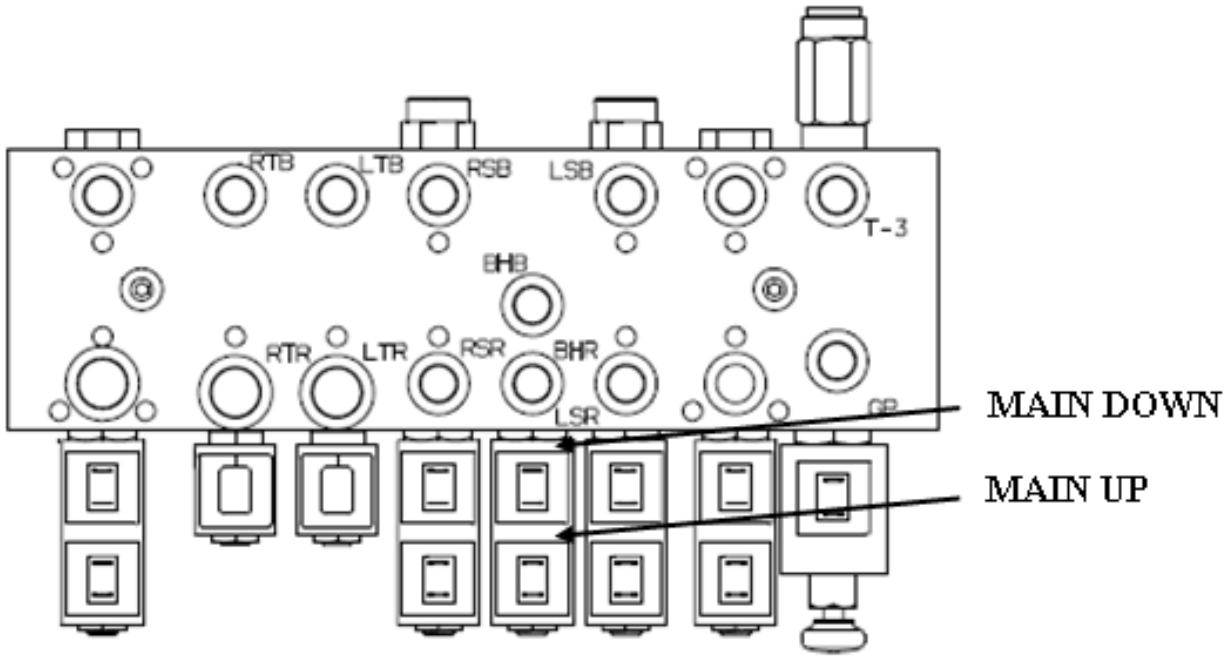

Figure 23: Rogator Valve Block

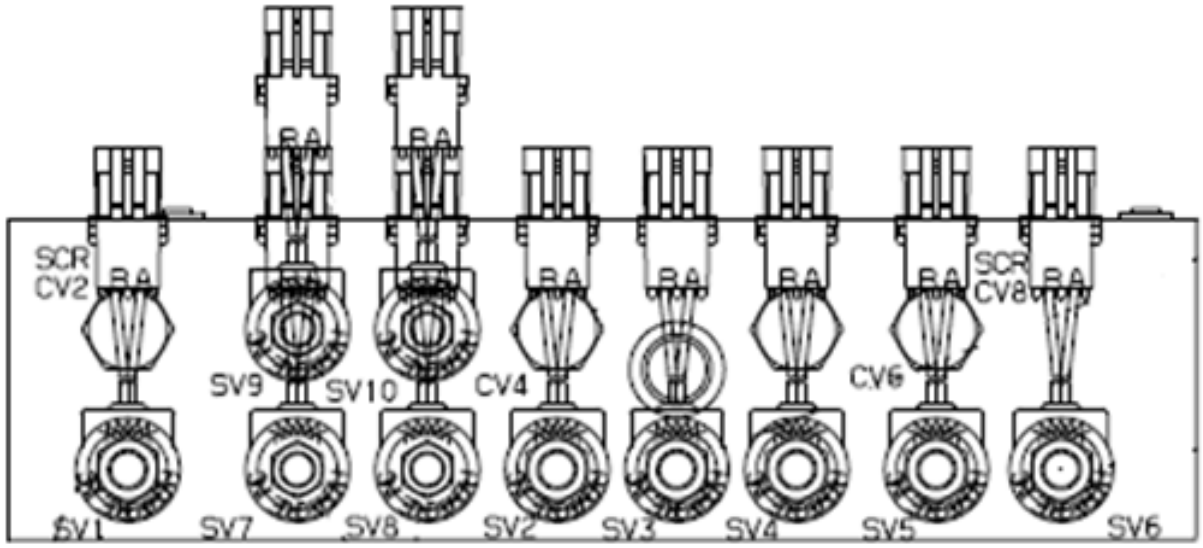

Figure 24: Solenoid Connections for Rogator Valve Block

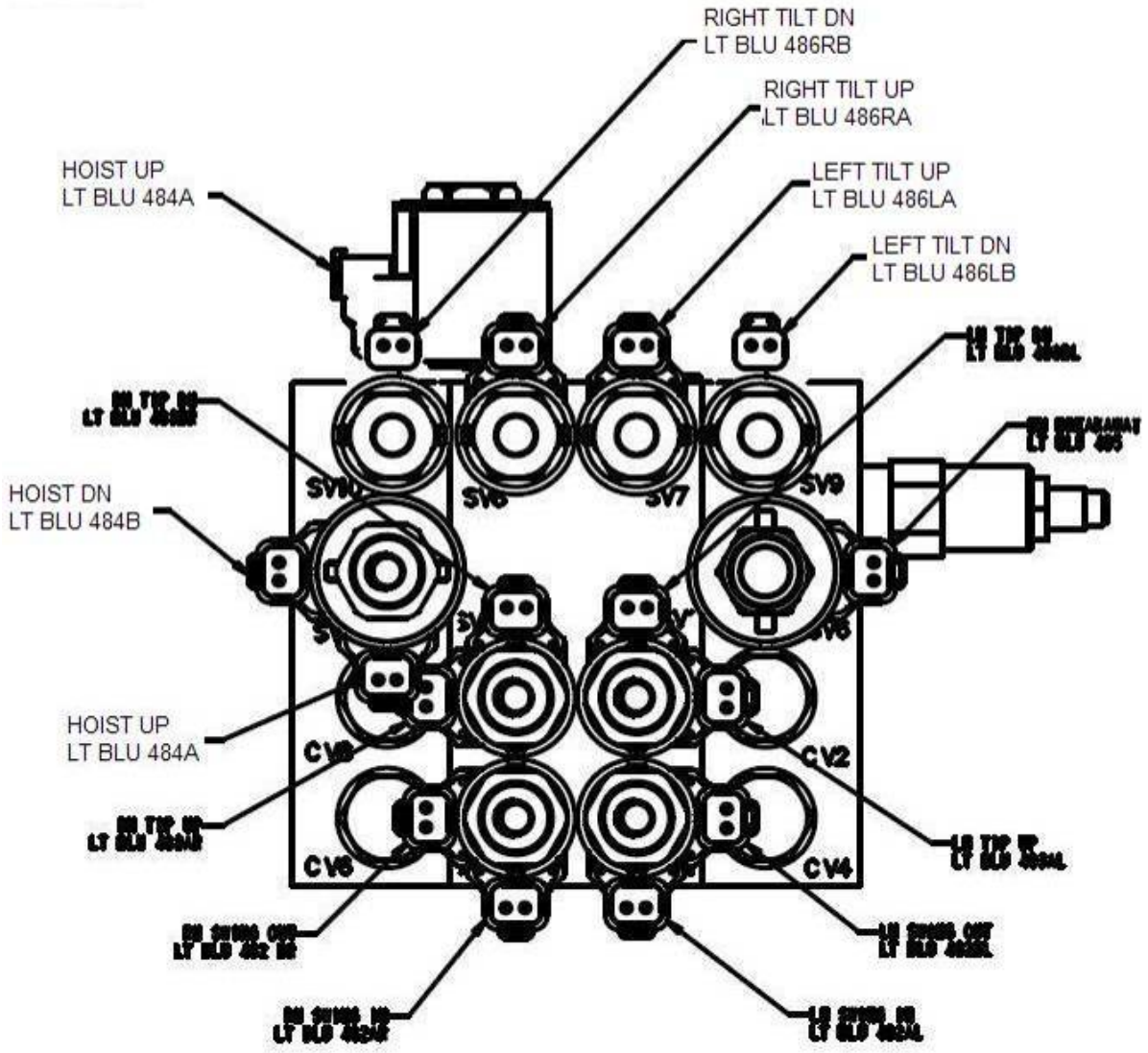

Figure 25: Rogator '64 / '74 Valve Block Connections

8. If the sprayer is equipped with a bypass valve, insert the connector labeled "Aux 1" into the bypass valve connectors. If the sprayer does not have a bypass valve, connect the male and female "Aux 1" connectors together.

9. If the sprayer is equipped with a second "Main Up" valve, insert the connector labeled "Aux 2" into the "Main Up" valve connector. Otherwise, connect the male and female "Aux 2" connectors together.

9 Connecting the Sensors to the CANbus

1. Route cable C03 from the input module to the 8-way coupler (E11).

2. Connect both roll sensors to the 8-way coupler. Fasten the 8-way coupler to the boom with cable ties.

3. Connect the main lift sensor to the 8-way coupler using cable C02 and a 2-way coupler (E12). Cable C02 and item E12 may not be needed if the 8-way coupler is mounted close enough to the main lift sensor.

4. Connect two cables (C05) to the 8-way coupler and route along the booms to the wing sensors. Follow existing cables and hoses to be sure the cable will not be pinched or stretched.

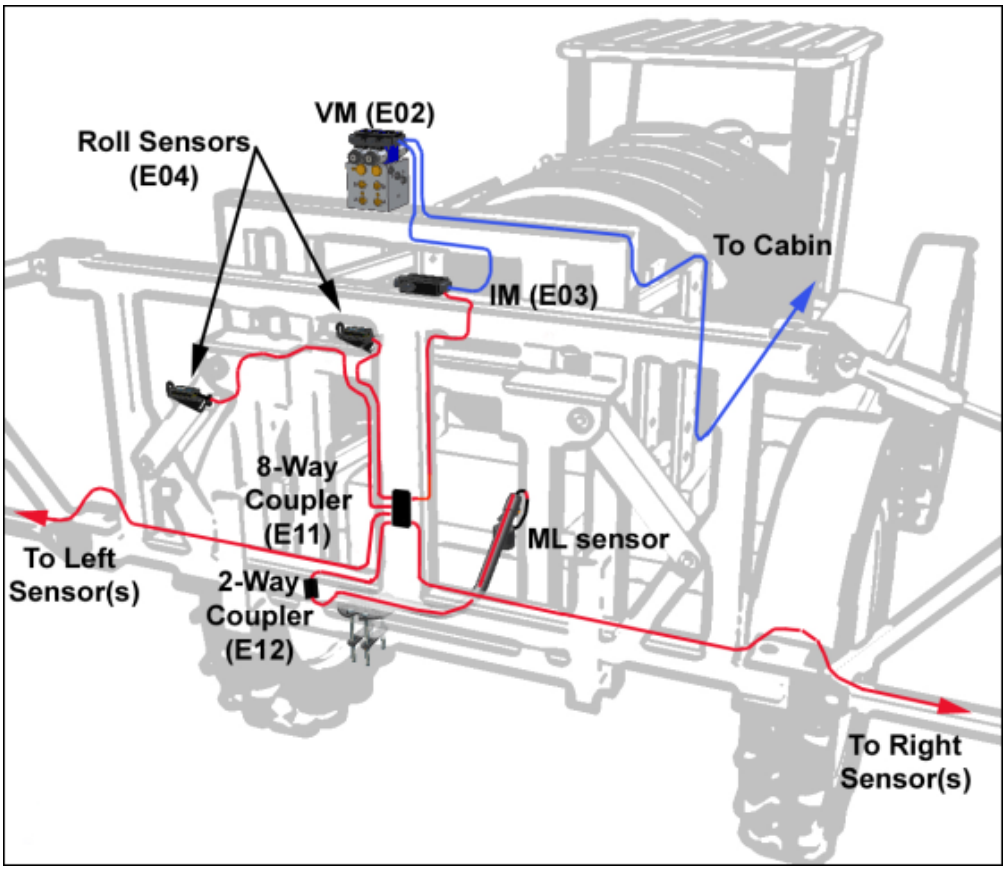

Figure 26: UC5 Module Locations and Cable Connections

5. At the sensor brackets, attach a 2-way coupler with terminator (E20) to the sprayer boom. The 2-way coupler with terminator is the white two way coupler. Plug the sensor and the CANbus cable into the 2-way coupler.

⚠ Important

Ensure that all unused connectors are plugged with the plugs provided.

10 Hydraulic Installation

This manual covers two styles of hydraulics. Be sure to follow the hydraulic sections that correspond to the correct fitting style.

Warning!

Ensure all pressure has been bled from the system before disconnecting any lines or fittings. Hydraulic pressure will exist on the wing tilt circuits unless the wings are being supported by other means. The hydraulic installation may be performed with the wings in transport position, resting on the ground or with the tilt cylinders fully extended.

Important

Component failure due to oil contamination is not covered under the NORAC UC5 system warranty. It is recommended that a qualified technician perform the hydraulic installation.

10.1 Valve Assembly for RG04 (JIC Fittings)

1. On a clean surface remove the plastic plugs from the block.
2. Install the 6MB 6MJ (F07) fittings into the "P" and "T" ports. Tighten to 18 ft-lbs (24 Nm).
3. Insert the two orifices (F09) into the "B" ports with the notch facing out.
4. Install the 6MB 6MJ (F07) fittings into the "B" ports. Tighten to 18 ft-lbs (24 Nm).
5. Install the 6MBP (F08) plugs into the "A" ports. Tighten to 18 ft-lbs (24 Nm).

10.2 Valve Assembly for RG06 (Flat Faced O-ring Fittings)

1. On a clean surface remove the plastic plugs from the block.
2. Install the 6MB 6MOR (F07) fittings into the "P" and "T" ports. Tighten to 18 ft-lbs (24 Nm).
3. Insert the two orifices (F09) into the "B" ports with the notch facing out.
4. Install the 6MB 6MOR (F07) fittings into the "B" ports. Tighten to 18 ft-lbs (24 Nm).
5. Install the 6MBP (F08) plugs into the "A" ports. Tighten to 18 ft-lbs (24 Nm).

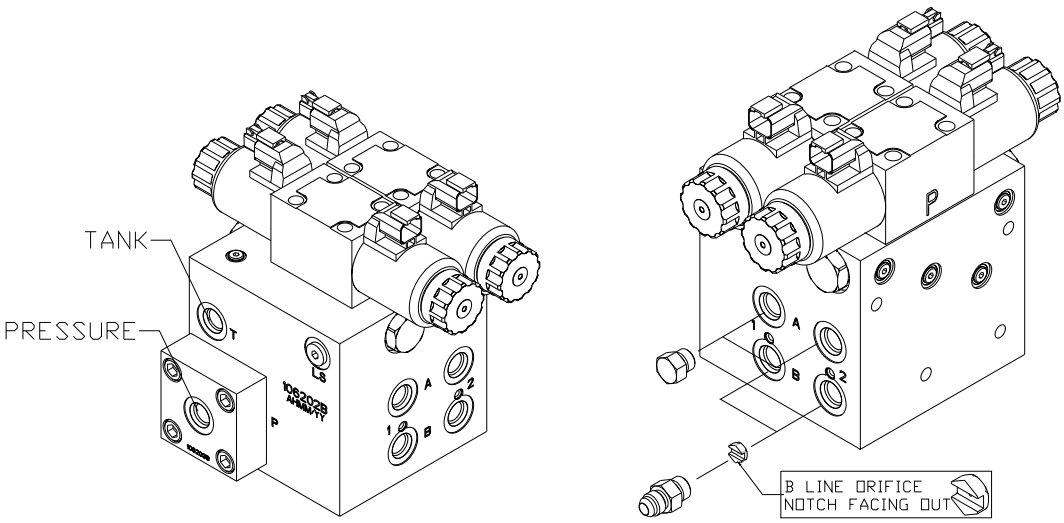

Figure 27: NORAC Valve Block Details

10.3 Valve Block Mounting

1. A suitable mounting location for the valve block on the Rogator is illustrated in **Figure 28**.
2. Insert the threaded rod into the block and use a hex nut to hold the rod. The block holes are 3/8" NC-1" deep. If bolts are used instead of the threaded rod, ensure the bolts thread in at least 3/8".
3. Use the remaining hardware to secure the block to the sprayer.
4. Cut off excess threaded rod, if necessary.

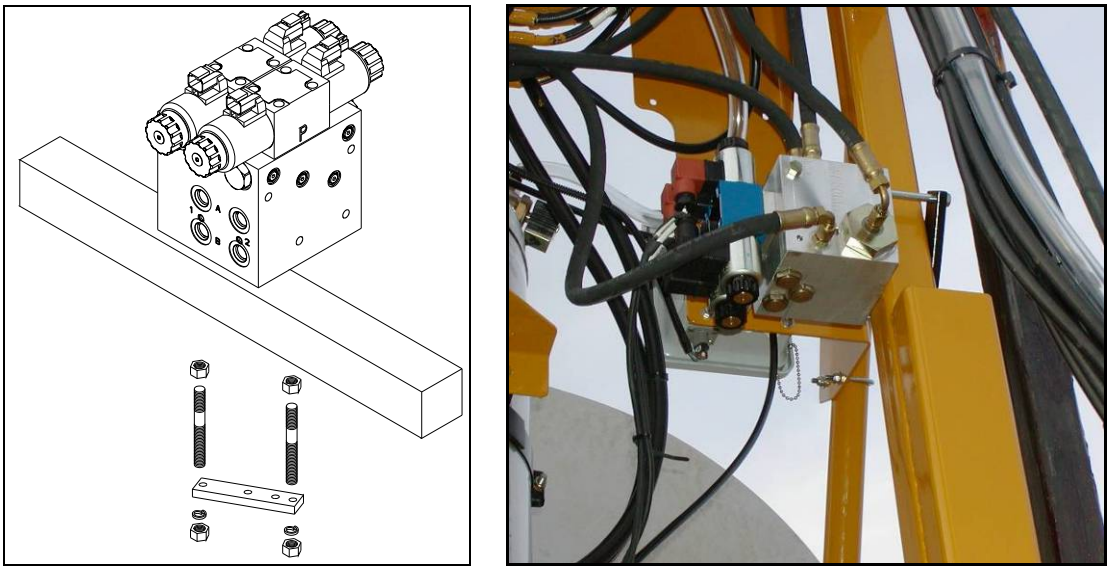

Figure 28: Valve Block Mounting

10.4 Hydraulic Plumbing for RG04 (JIC Fittings)

Warning!

From this point on in the installation the booms will be inoperative until the hydraulics are fully installed.

1. After the NORAC valve is mounted, the hydraulic hoses and fittings can be plumbed. The plumbing for the hydraulic circuit is shown schematically in **Figure 3**.

2. Disconnect the tank line at the Rogator valve block and insert the 8FJXR 8MJT tee (F03) or insert the 12FJXR 12MJT tee (F12) and 12FJ 8MJ adapter (F13).

3. Connect hose H05 to the tee and route to the NORAC valve block.

4. Disconnect the pressure line at the Rogator valve block and insert the 6FJXR 6MJT tee (F02) or insert the 8FJXR 8MJT tee (F03) and 10MB 8MJ adapter (F11) and 8FJ 6MJ adapter (F14).

5. Connect hose H04 to the tee and route to the NORAC valve block.

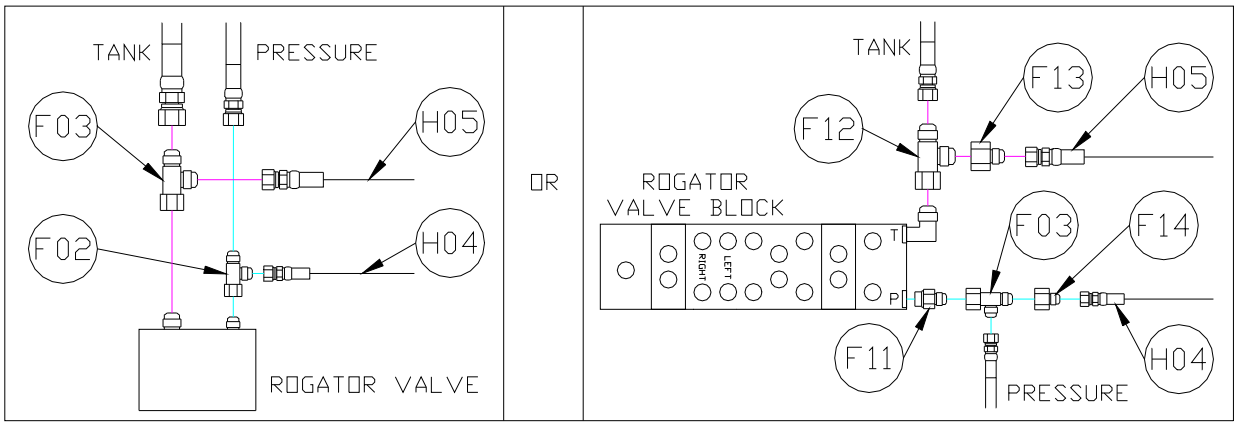

Figure 29: Rogator Pressure and Tank Plumbing

6. Connect hose H04 to the pressure port and hose H05 to the tank port on the NORAC valve block.

7. Disconnect and remove the existing left and right raise lines.

8. Insert the 12FJ 6MJ fitting (F05) to the left and right raise ports on the Rogator valve block.

9. Connect each of the two H04 hoses to fittings F05 and route the hoses to the NORAC valve block.

10. Connect each of the two H04 hoses to the corresponding left and right "B" port on the NORAC valve block. Insert the 6FJXR 6MJT tee (F02) between the hoses and the valve block.

11. The left raise line (H03) must now be connected to the left tee on the "B" port and the right raise line (H02) must be connected to the right tee. Route the hoses to the tilt cylinders. H03 is longer than H02 since the NORAC valve block is normally located on the right side of the sprayer.

12. Connect H02 and H03 to the cylinders using the 12FJ 6MJ fittings (F05).

13. The existing lower lines do not need to be modified. Leave these lines connected to the Rogator valve block

10.5 Hydraulic Plumbing For RG06 (Flat Faced O-Ring Fittings)

Warning!

From this point on in the installation the booms will be inoperative until the hydraulics are fully installed.

1. After the NORAC valve is mounted, the hydraulic hoses and fittings can be plumbed. The plumbing for the hydraulic circuit is shown schematically in **Figure 3**.

2. Disconnect the tank line at the Rogator valve block and insert the 8FORXR 8MORT tee (F03) or insert the 12FORXR 12MORT tee (F12) and 12FORX 8MOR adapter (F13).

3. Connect hose H05 to the tee and route to the NORAC valve block.

4. Disconnect the pressure line at the Rogator valve block and insert the 6FORXR 6MORT tee (F02) or insert the 8FORXR 8MORT tee (F03) and 10MB 8MOR adapter (F11) and 8FORX 6MOR adapter (F14).

5. Connect hose H04 to the tee and route to the NORAC valve block.

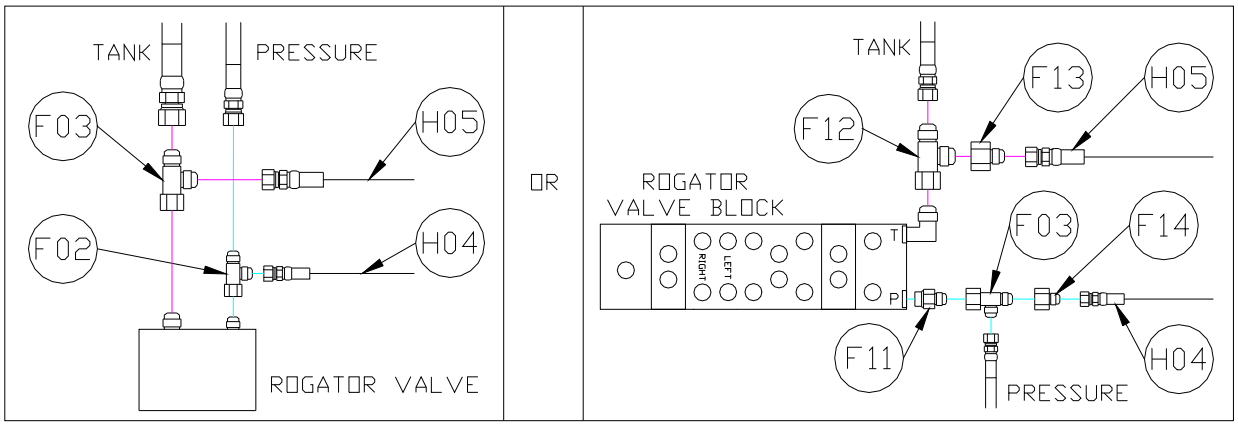

Figure 30: Rogator Pressure and Tank Plumbing

6. Connect hose H04 to the pressure port and hose H05 to the tank port on the NORAC valve block.

7. Disconnect and remove the existing left and right raise lines.

8. Insert the 12FORX 6MOR fitting (F05) to the left and right raise ports on the Rogator valve block.

9. Connect each of the two H04 hoses to fittings F05 and route the hoses to the NORAC valve block.

10. Connect each of the two H04 hoses to the corresponding left and right "B" port on the NORAC valve block. Insert the 6FORXR 6MORT tee (F02) between the hoses and the valve block.

11. The left raise line (H03) must now be connected to the left tee on the "B" port and the right raise line (H02) must be connected to the right tee. Route the hoses to the tilt cylinders. H03 is longer than H02 since the NORAC valve block is normally located on the right side of the sprayer.

12. Connect H02 and H03 to the cylinders using the 12FORX 6MOR fittings (F05).

13. The existing lower lines do not need to be modified. Leave these lines connected to the Rogator valve block.

11 Software Setup

1. Start up the sprayer and test the sprayer's functionality. The display terminal does not need to be powered on for the original boom function switches to operate. Unfold the booms and raise/lower each boom and the main section.

⚠ Important

Confirm that the cabling and hoses are agreeable to the entire range of motion.

2. If any functions do not work, review the hydraulic and electrical portions of this manual to check for proper installation.

3. Turn on the power for the display terminal using the switch on the side.

4. The procedure for the installation of the UC5 Spray Height Control system is now complete. Begin the AUTOMATIC SYSTEM SETUP procedure as described in the UC5 Spray Height Control Operator's Manual.

12 Cable Drawings

12.1 ITEM C01: 43220-10 - CABLE UC5 NETWORK 14 AWG - 10M

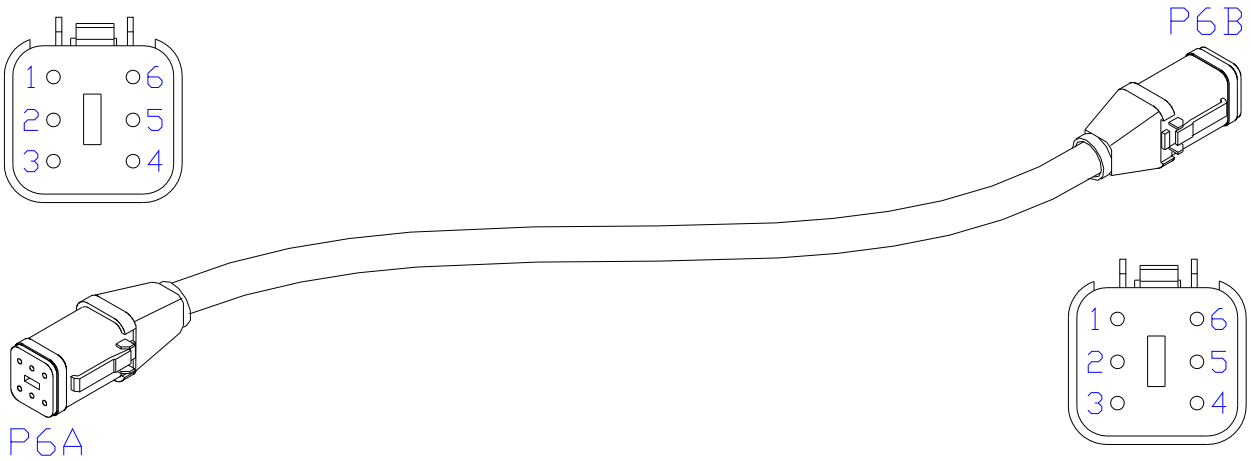

12.2 ITEM C02: 43220-01 - CABLE UC5 NETWORK 14 AWG - 1M

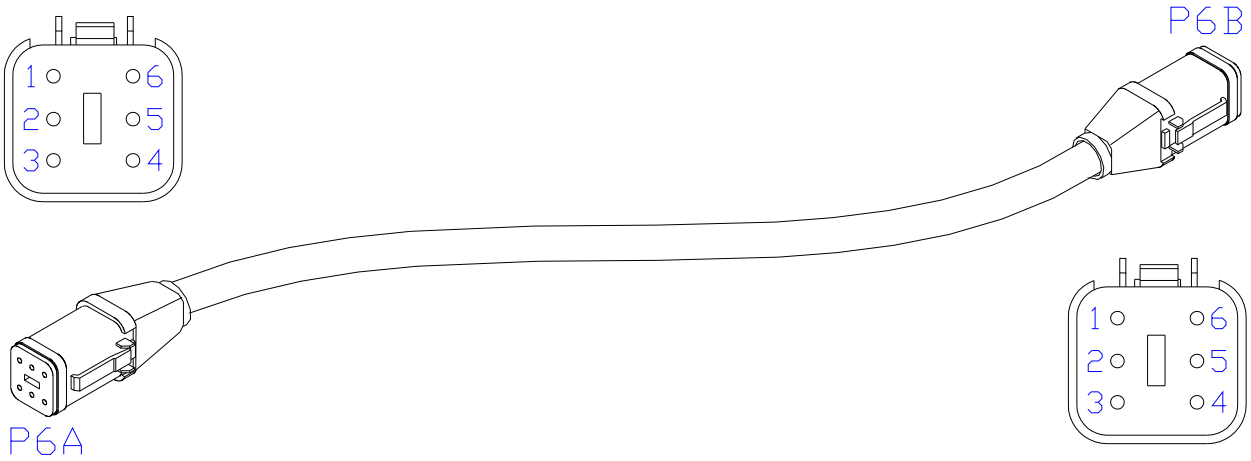

12.3 ITEM C03: 43220-03 - CABLE UC5 NETWORK 14 AWG - 3M

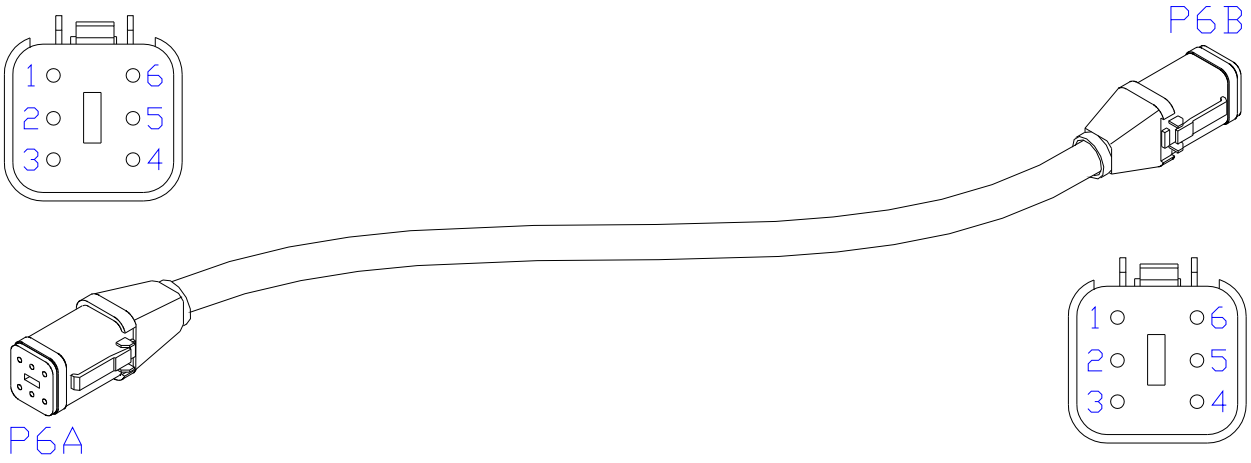

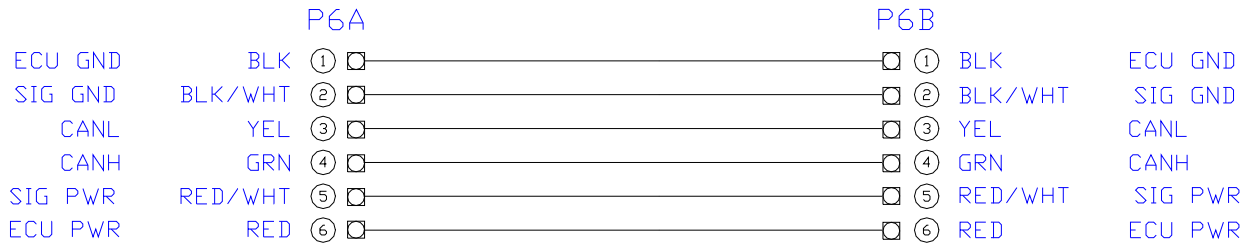

12.4 ITEM C05: 43210-20 - CABLE UC5 NETWORK 18 AWG - 20M

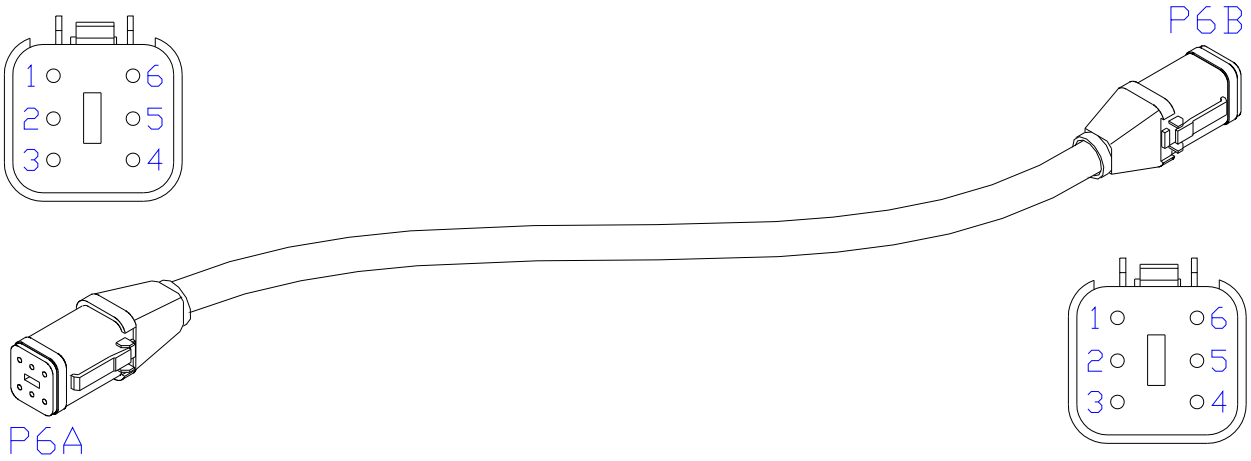

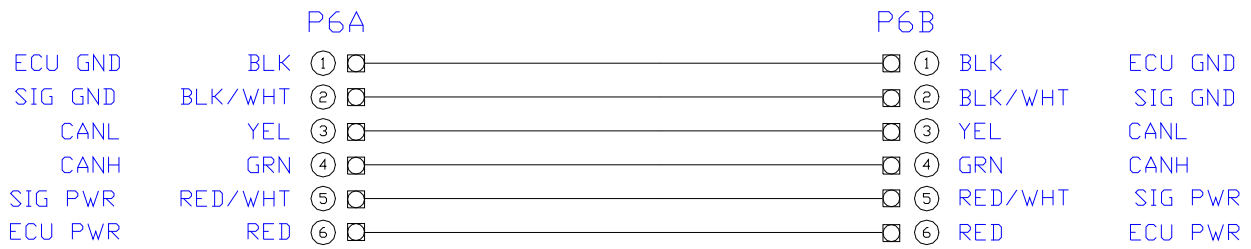

12.5 ITEM C10: 43230-04 – CABLE UC5 VALVE DT TO DT

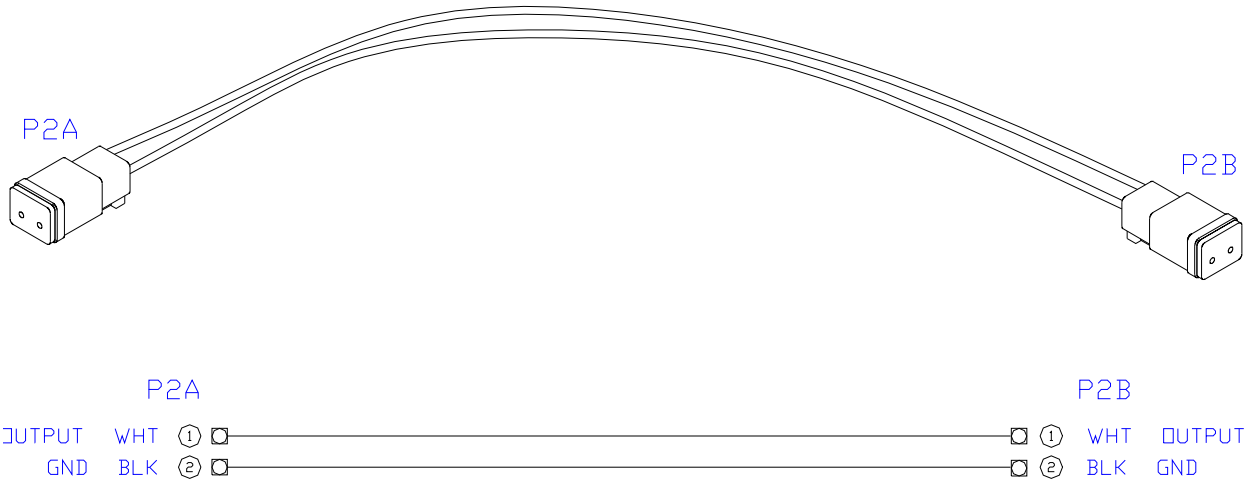

12.6 ITEM C20: 43240-01 – CABLE UC5 INTERFACE TILT DT

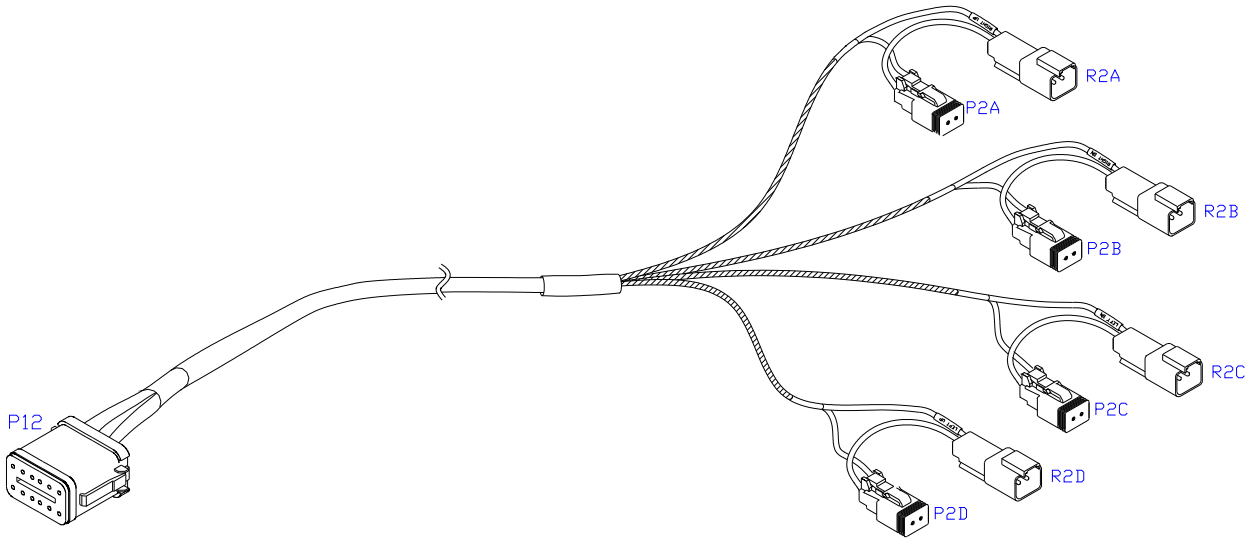

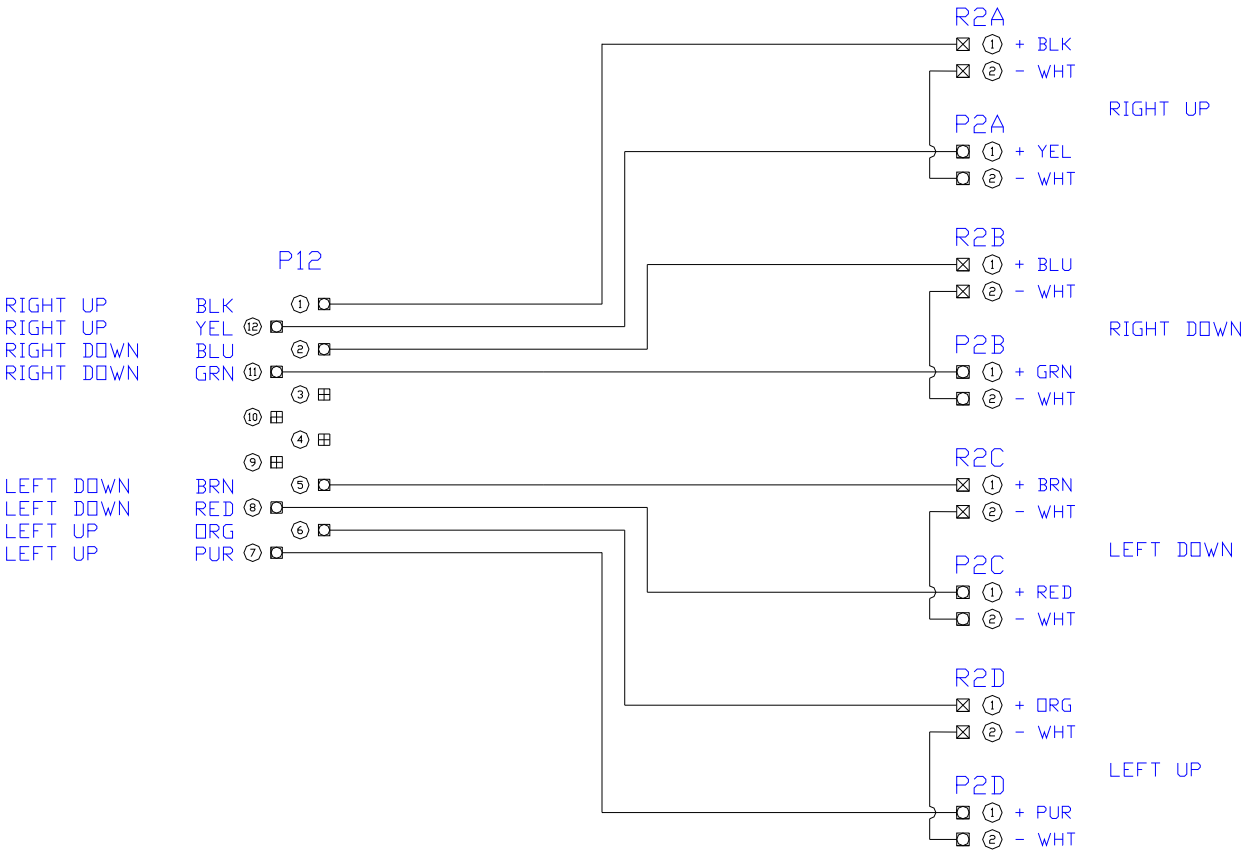

12.7 ITEM C21: 43240-07 – CABLE UC5 INTERFACE MAIN DT (WITH AUX 1 & 2)

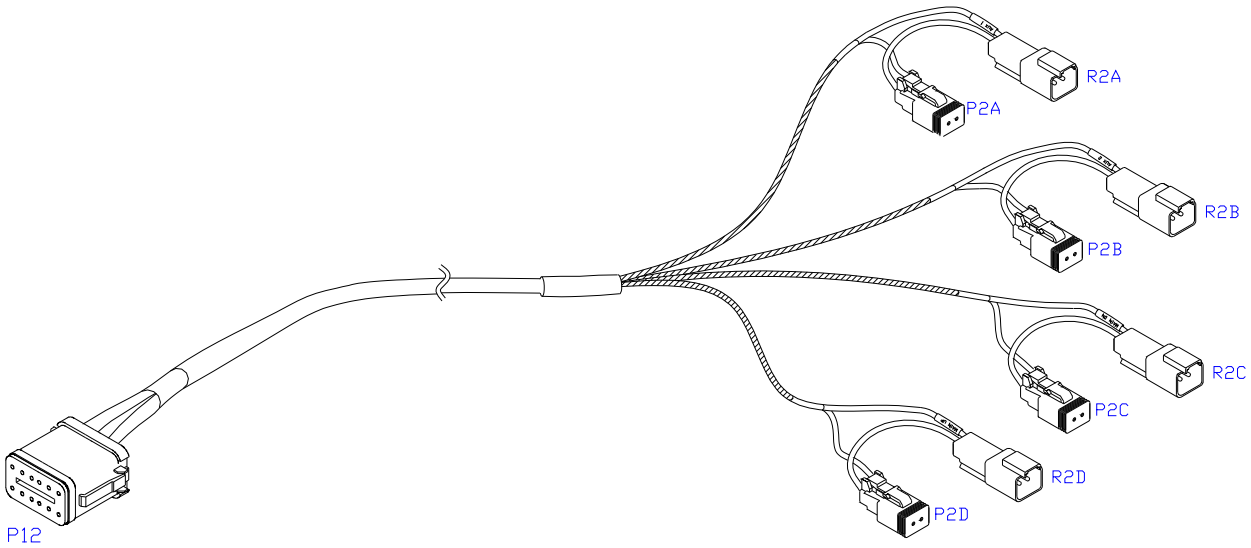

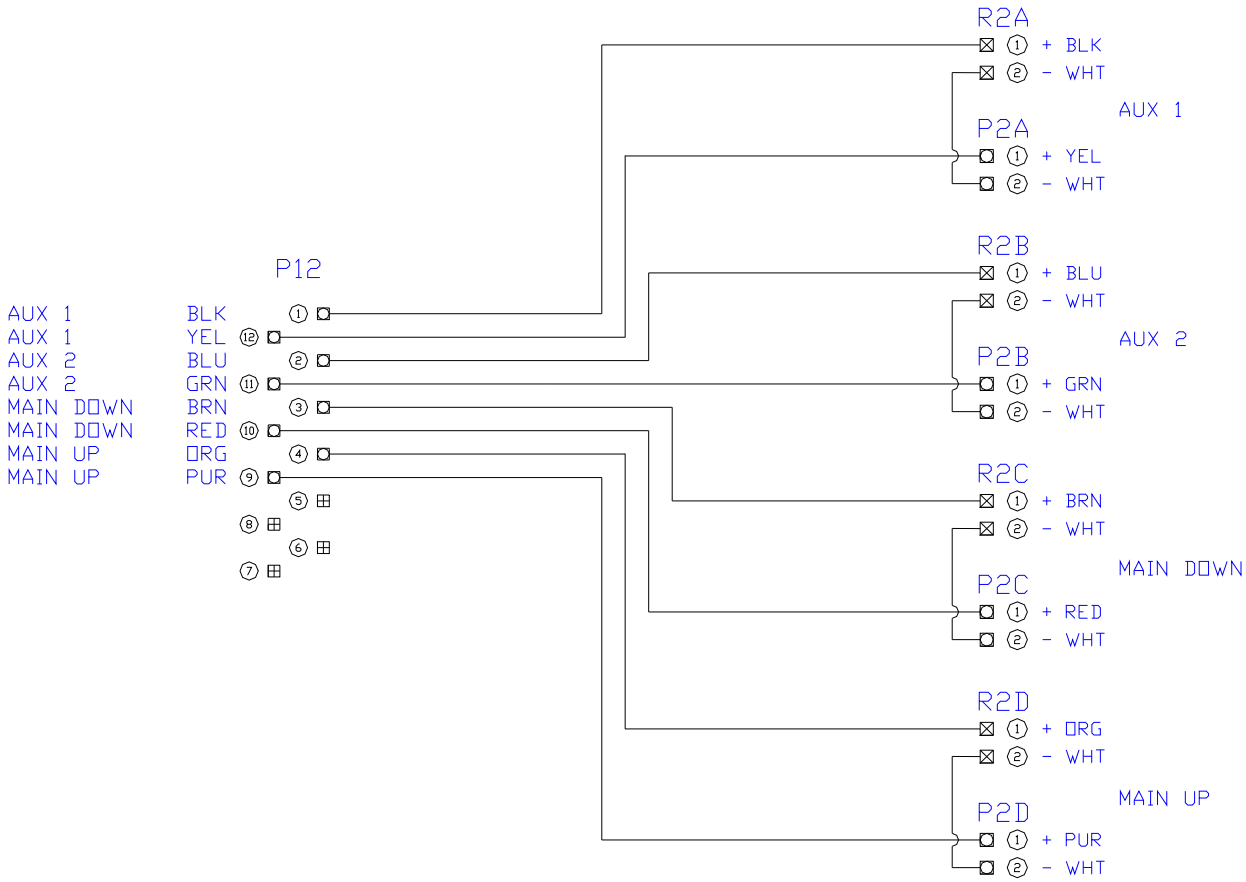

12.8 ITEM C30: 43250-04 – CABLE UC5 BATTERY AMP FUSED

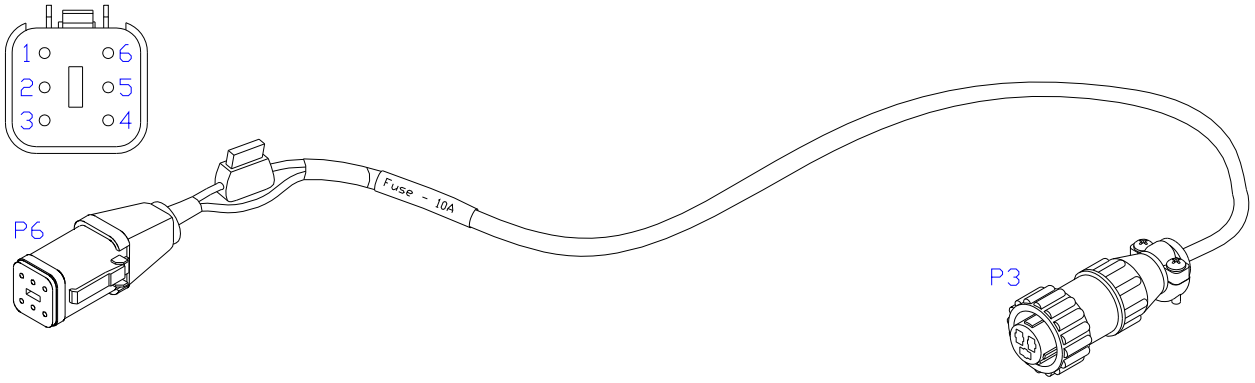

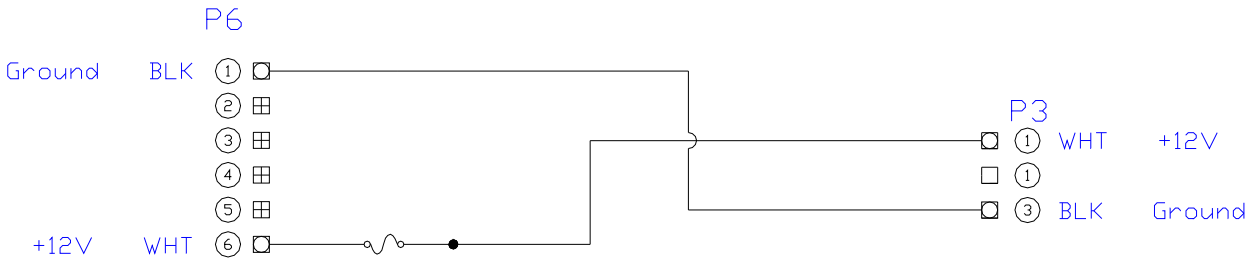

Canada
NORAC Systems International Inc.
Phone: (+1) 306 664 6711
Toll Free: 1 800 667 3921
Shipping Address:
3702 Kinnear Place
Saskatoon, SK
S7P 0A6

United States
NORAC, Inc.
Phone: (+1) 952 224 4142
Toll Free: 1 866 306 6722
Shipping Address:
6667 West Old Shakopee Road, Suite 111
Bloomington, MN
55438

Europe
NORAC Europe
Phone: (+33) (0)4 26 47 04 42
Shipping Address:
Rue de l'hermitage
01090 GUEREINS
France

www.norac.ca

NORAC