NORAC®

UC5™ CAN BUS Spray Height Control System

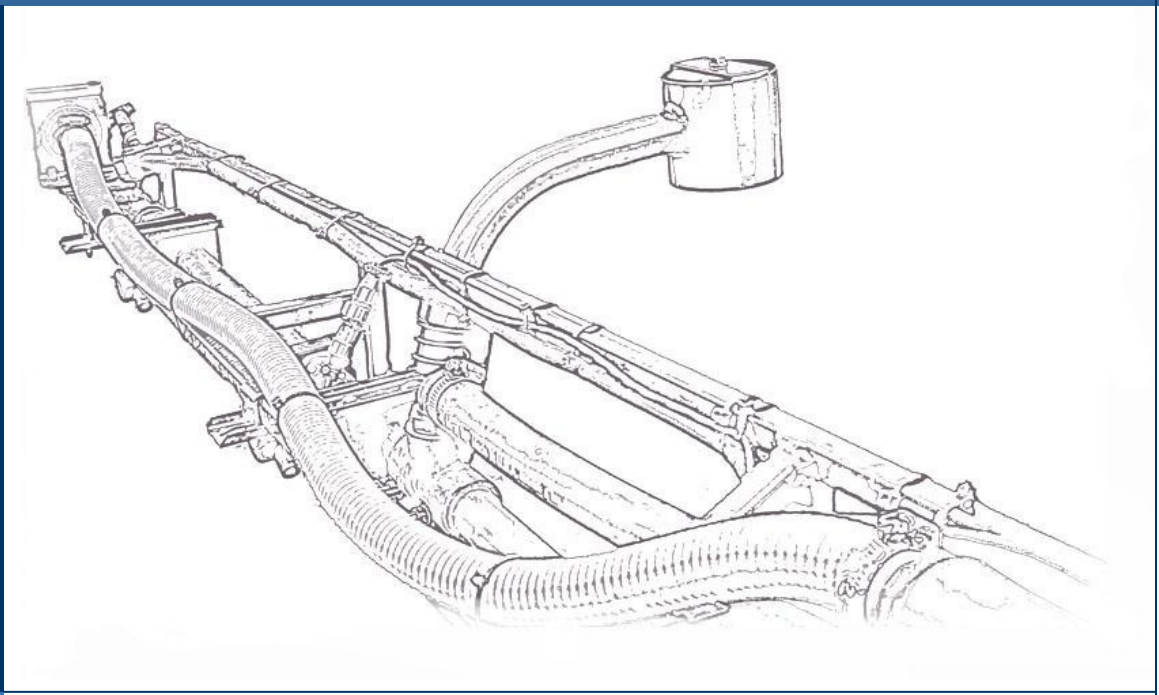

John Deere (4720, 4710, 4700) Installation Manual

JD07

Printed in Canada
Copyright © 2015 by NORAC Systems International Inc.
Reorder P/N: UC5-BC-JD07-INST Rev P (John Deere 4720, 4710, 4700)

NOTICE: NORAC Systems International Inc. reserves the right to improve products and their specifications without notice and without the requirement to update products sold previously. Every effort has been made to ensure the accuracy of the information contained in this manual. The technical information in this manual was reviewed at the time of approval for publication.

Contents

1 Introduction

Congratulations on your purchase of the NORAC UC5 Spray Height Control System. This system is manufactured with top quality components and is engineered using the latest technology to provide operating reliability unmatched for years to come.

When properly used the system can provide protection from sprayer boom damage, improve sprayer efficiency, and ensure chemicals are applied correctly.

Please take the time to read this manual completely before attempting to install the system. A thorough understanding of this manual will ensure that you receive the maximum benefit from the system.

Your input can help make us better! If you find issues or have suggestions regarding the parts list or the installation procedure, please don't hesitate to contact us.

⚠ Important

Every effort has been made to ensure the accuracy of the information contained in this manual. All parts supplied are selected to specially fit the sprayer to facilitate a complete installation. However, NORAC cannot guarantee all parts fit as intended due to the variations of the sprayer by the manufacturer.

Please read this manual in its entirety before attempting installation.

2 Technical Specifications

CAN ICES-3(A)/NMB-3(A)

This device complies with part 15 of the FCC Rules. Operation is subject to the following two conditions: (1) This device may not cause harmful interference, and (2) this device must accept any interference received, including interference that may cause undesired operation.

This equipment has been tested and found to comply with the limits for a Class A digital device, pursuant to part 15 of the FCC Rules. These limits are designed to provide reasonable protection against harmful interference when the equipment is operated in a commercial environment. This equipment generates, uses, and can radiate radio frequency energy and, if not installed and used in accordance with the instruction manual, may cause harmful interference to radio communications. Operation of this equipment in a residential area is likely to cause harmful interference in which case the user will be required to correct the interference at their own expense.

This Class A digital apparatus complies with Canadian ICES-003.

Pursuant to EMC Directive – Article 9, this product is not intended for residential use.

Table 1: System Specifications

Supply Voltage (rated)	12VDC
Supply Current (rated)	10A
Hydraulic Pressure (maximum)	3300 psi
Baud Rate	250 kbps
Clock Frequency (maximum)	96 MHz
Solenoid Valve PWM Frequency	300 Hz
Ultrasonic Sensor Transmit Frequency	50 kHz
Operating Temperature Range	0°C to 80°C

3 General UC5 System Layout

Figure 1 illustrates the general layout of the UC5 system components:

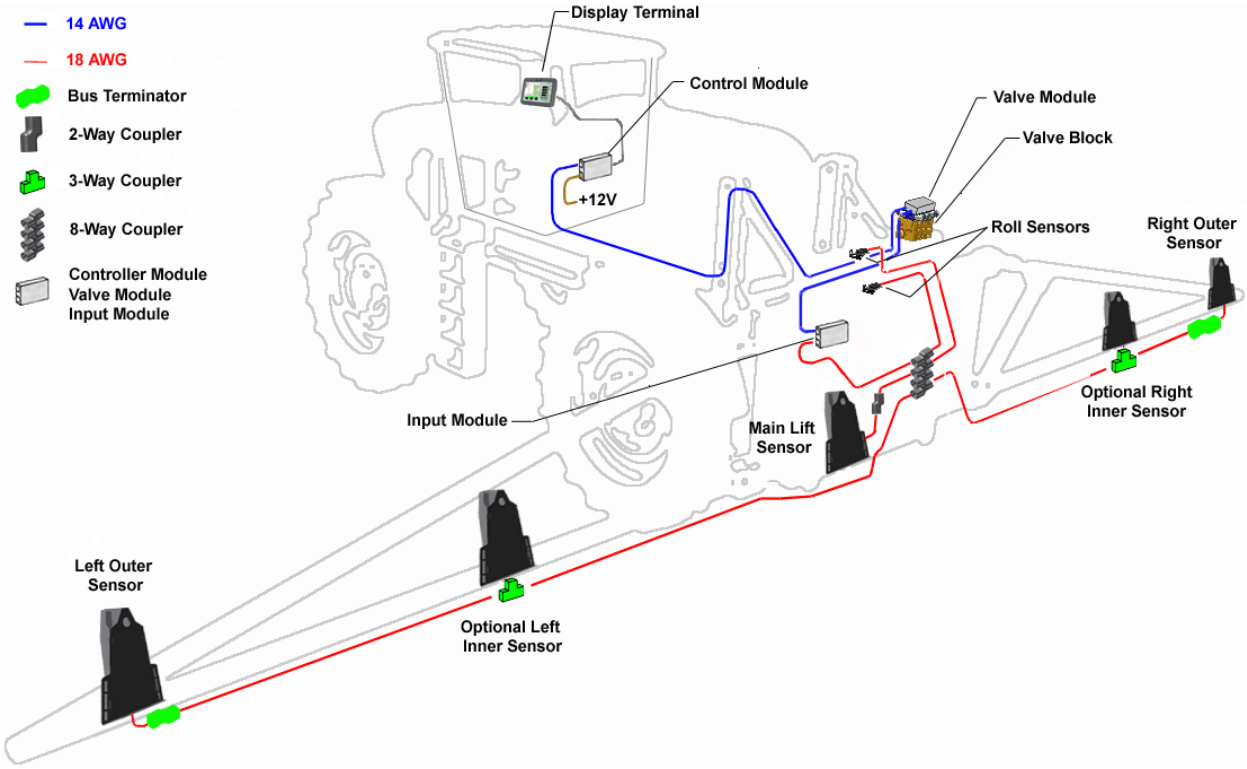

Figure 1: General UC5 System Layout

4 Kit Parts

4.1 Kit Overview

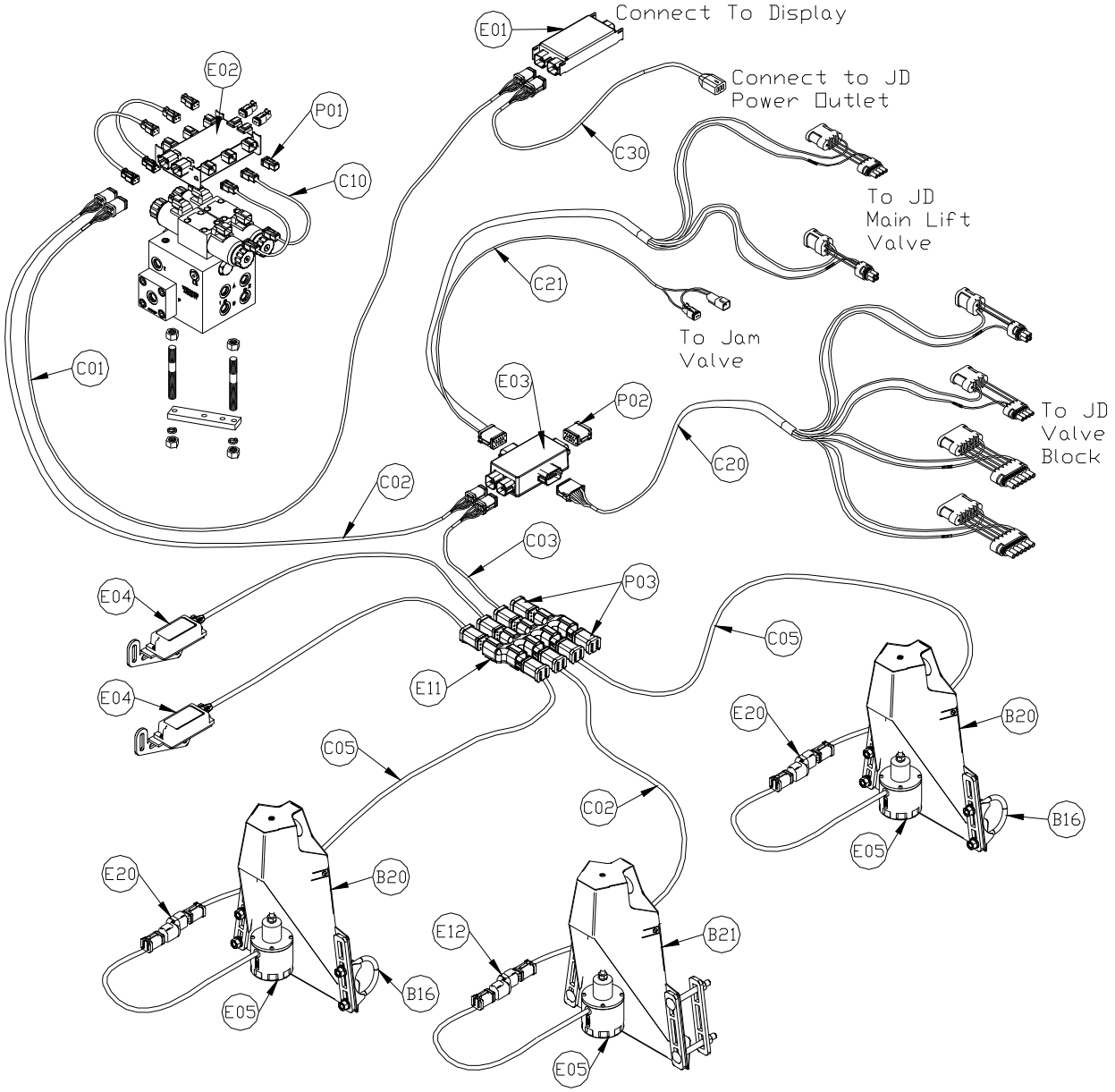

Figure 2: JD07 System Parts

4.2 Hydraulic Plumbing

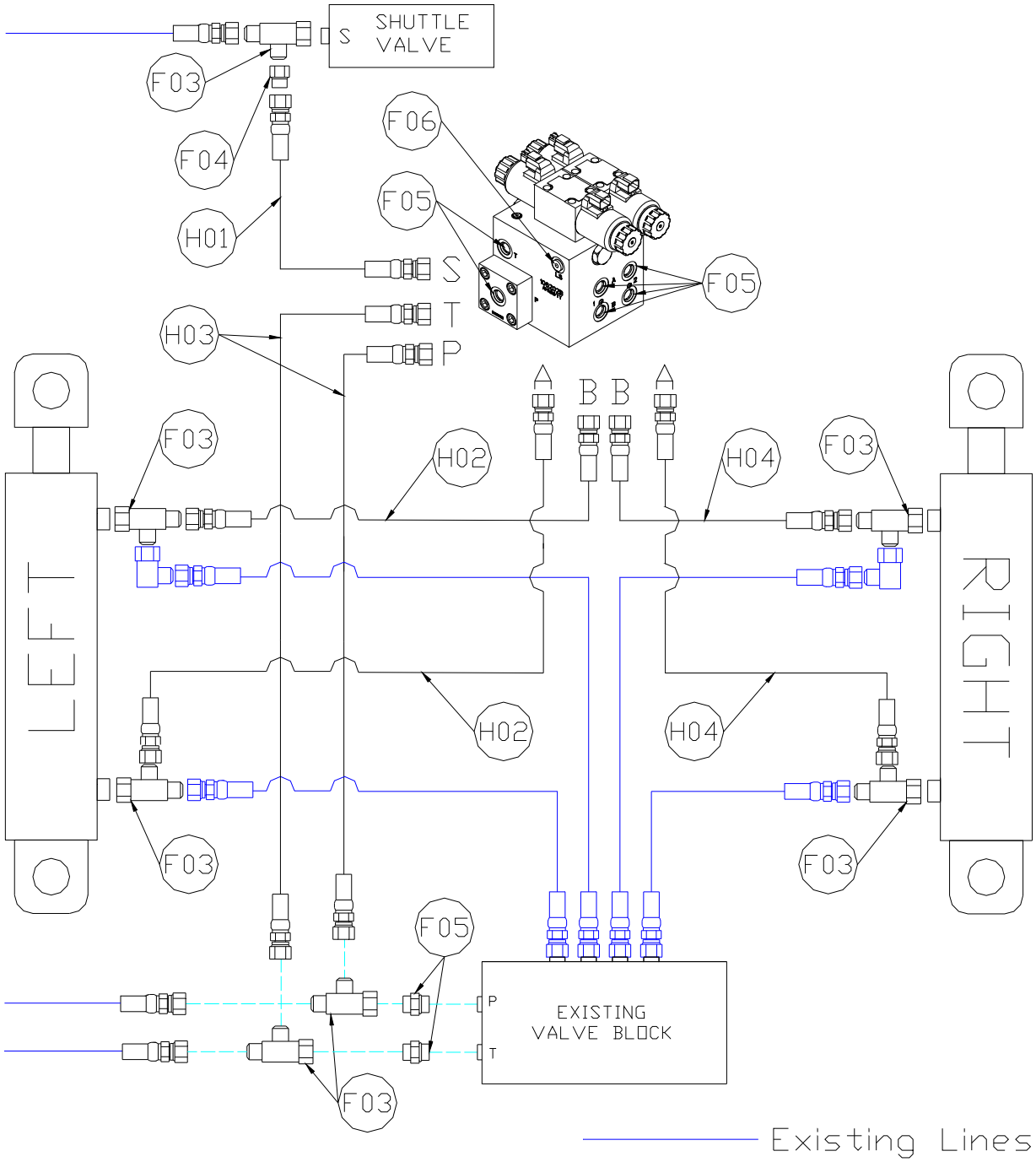

Figure 3: JD07 Hydraulic Plumbing

4.3 List of Parts

Item	Part Number	Name	Quantity
B05	44706-01	KIT CABLE TIE BLACK 10 PCS 21 IN 150 PCS 7.5 IN	1
B16	105416	CLAMP ROUND 1-1/4 IN SS	4
B20	44971	SENSOR MOUNTING BRACKET LOW PROFILE 16GA	2
B21	44973	SENSOR MOUNTING BRACKET LOW PROFILE 16 GA LARGE FLANGE	1
C01	43220-10	CABLE UC5 NETWORK 14 AWG 10M	1
C02	43220-01	CABLE UC5 NETWORK 14 AWG 1M	2
C03	43220-03	CABLE UC5 NETWORK 14 AWG 3M	1
C05	43210-20	CABLE UC5 NETWORK 18 AWG 20M	2
C10	43230-04	CABLE UC5 VALVE 2PIN DT TO 2PIN DT	4
C20	43240-06	CABLE UC5 INTERFACE TILT JD	1
C21	43240-05	CABLE UC5 INTERFACE MAIN JD	1
C30	43250-07	CABLE UC5 BATTERY JD FUSED	1
E01	43710	UC5 CONTROLLER MODULE	1
E02	43720	UC5 VALVE MODULE	1
E03	43732	UC5 INPUT MODULE PASS THRU	1
E04	43741	UC5 ROLL SENSOR VER. 2	2
E05	43750	UC5 ULTRASONIC SENSOR	3
E11	43765	UC5 NETWORK COUPLER 8-WAY	1
E12	43764	UC5 NETWORK COUPLER 2-WAY	1
E20	43764T	UC5 NETWORK COUPLER 2-WAY WITH TERMINATOR	2
H01	44862-05	HOSE ASSEMBLY 122R2-04 144 IN L 4FORX 4FORX	1
H02	44863-53	HOSE ASSEMBLY 122R2-06 66 IN L 6FORX 6FORX	2
H03	44863-23	HOSE ASSEMBLY 122R2-06 32IN L 6FORX 6FORX	2
H04	44863-31	HOSE ASSEMBLY 122R2-06 104 IN L 6FORX 6FORX	2
H10	44865-36	HYDRAULICS FITTING KIT - JD8	1
M02	UC5-BC-JD07-INST	MANUAL INSTALLATION UC5 JOHN DEERE (4720, 4710, 4700)	1
P01	106034	UC5 NETWORK 2 PIN PLUG	4
P02	106602	UC5 NETWORK 12 PIN PLUG (A-KEY)	1
P03	105882	UC5 NETWORK 6 PIN PLUG	2
V01	44963D	VALVE BLOCK ASSEMBLY 2 STATION CC/LS PROP DT 4 BOLT	1

4.4 Hydraulic Fitting Kit Details (P/N: 44865-36)

Item	Part Number	Name	Quantity	Picture
F02	104691	TEE ADAPTER - 4FORXR 4MORT	1	
F03	104586	TEE ADAPTER - 6FORXR 6MORT	7	
F04	105226	MALE TO FEMALE ADAPTER - 4MOR 6FORX	1	
F05	44917	MALE ADAPTER - 6MB-6MOR MACHINED ORB	8	
F06	104693	MALE ADAPTER - 4MOR 4MB	1	
F15	105500	SETSCREW 1/4X3/8	1	

Fitting Name Example:

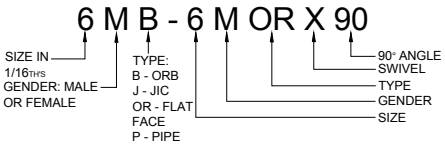

⚠ Important

Do not use high speed power tools/drills when installing hardware.

⚠ Important

The use of dielectric grease is not recommended on any NORAC electrical connections.

⚠ Important

To ensure all stainless steel hardware does not gall or seize apply a light coating of the supplied Permatex Anti-seize grease to all threaded parts upon installation. Permatex Anti-seize lubricant is preferred, but other similar anti-seize products may be used.

5 Pre-Install Checklist

The pre-install checklist is necessary to check the existing sprayer functionality before the installation.

1. Unfold the sprayer over a flat, unobstructed area (i.e. no power lines…etc.).
2. Ensure all boom-fold operations are functional (place a check mark in boxes below).
3. Bring engine to field-operational RPM and record below.
4. Record the time (seconds) it takes for a full stroke for all boom functions. To ensure repeatable measurements, take the average of 3 trials.
5. Not all sprayers will have the functions listed below in **Figure 4**.

⚠ Important

Ensure the boom has sufficient travel so it does not contact the ground during these tests.

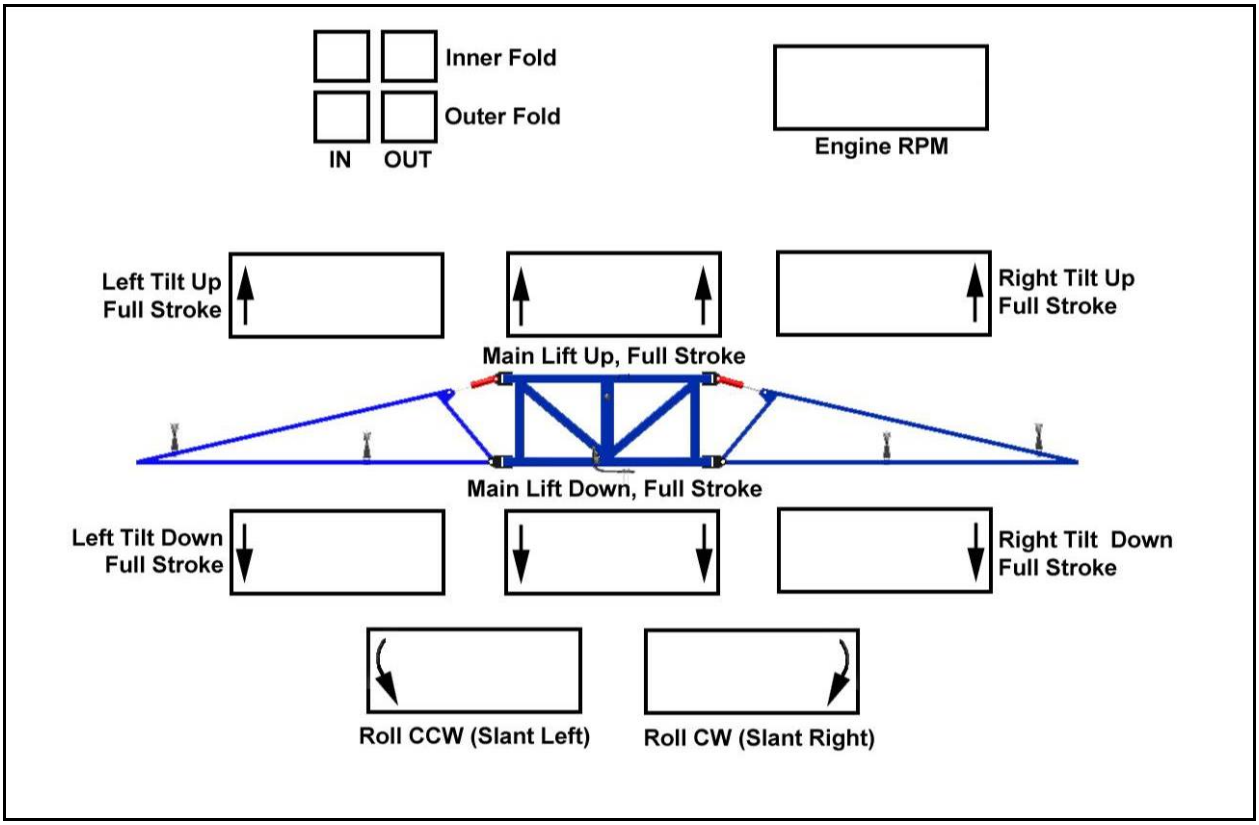

Figure 4: Pre-Install Boom Speeds

6 Ultrasonic Sensor Installation

6.1 Ultrasonic Sensor Serial Number Arrangement

When installing the UC5 sensors, start with the smallest serial number on the left-hand side, and proceed to the largest serial number on the right hand side. Each UC5 sensor has a serial number stamped on the sensor housing.

Apply a light coating of the supplied Permatex Anti-seize grease to all threaded parts upon installation.

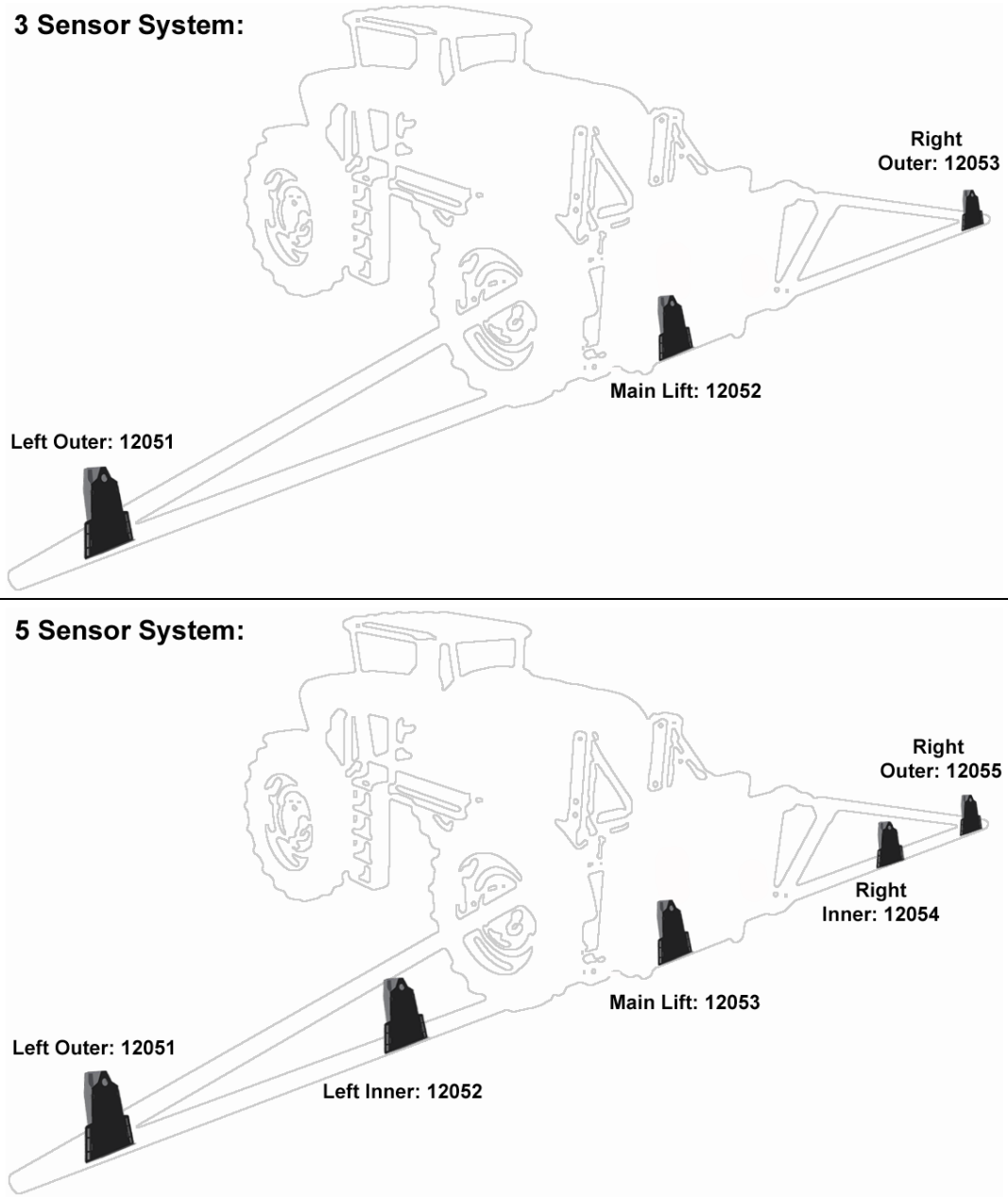

Figure 5: Sensor Serial Number Arrangement

6.2 Ultrasonic Sensor Mounting Guidelines

The following guidelines will ensure optimal sensor performance and prevent sensor measurement error. These rules should be followed for both the wing sensors and the main lift (middle) sensor.

1. In its lowest position, the sensor must be 9 inches (23 cm) or more from the ground.

2. Ensure that there are no obstructions within a 12-inch diameter circle projected directly below the center of the sensor.

3. The sensor should be approximately vertical at normal operating heights.

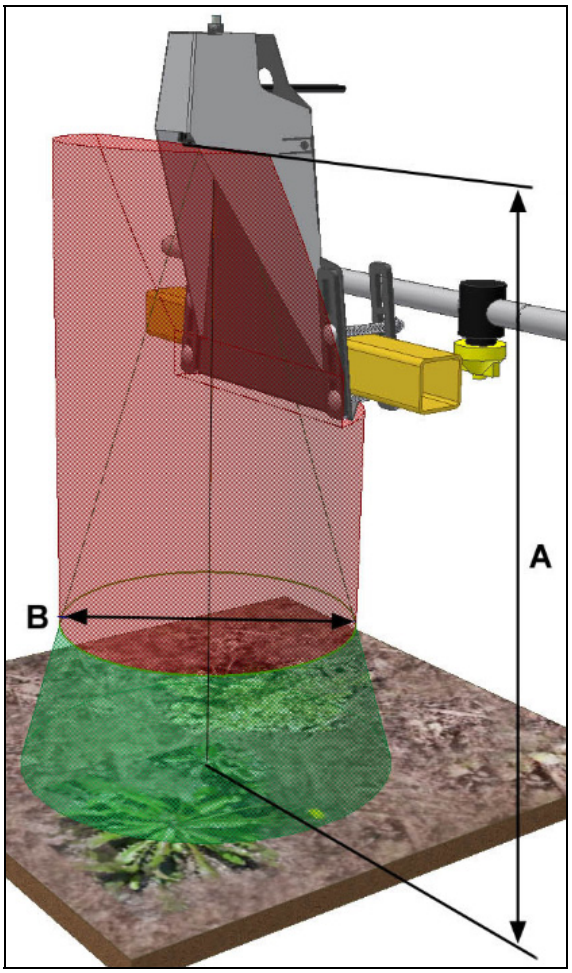

Figure 6: Sensor Mounting Guidelines

6.3 Low Profile Bracket Mounting Guidelines

1. Minimize the distance between the bolts to prevent bending the bracket and prevent the bracket from loosening over time.

2. Ensure the bracket is mounted tight against the bottom of the boom, minimizing the distance between the boom structure and the angled flange.

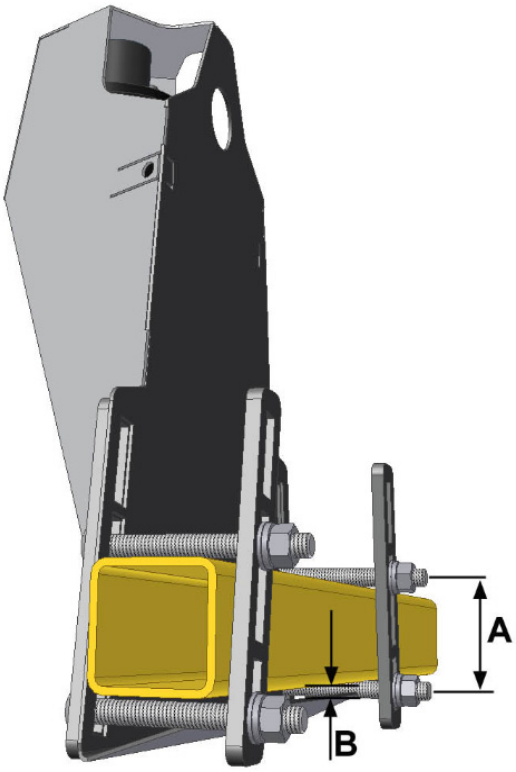

Figure 7: Bracket Mounting Guidelines

⚠ Important

A problem can arise if a sensor is not mounted correctly. It is possible for the sensor to read off of the boom instead of the ground. This may only become apparent once the control system is switched from soil to crop mode.

Also be careful that the sensor bracket does not collide with any other part of the boom when the boom is folded to transport position. If possible, mount the sensor brackets while the booms are folded to ensure they will not cause interference.

6.4 Wing Sensor Installation

1. The wing sensor mounting brackets (B20) are the two brackets with the shorter mounting flange.

2. The sensor bracket should be oriented forward (ahead of the boom).

3. Typically the best mounting location for the wing sensor brackets will be near the end of the boom tips, approximately two feet (60cm) from the end.

4. Depending on the boom design, some breakaway sections will lift upwards as they break back. If the sensor is mounted to this portion of the boom, the system will force the boom downwards towards the ground as the boom folds backwards.

5. Mount the NORAC UC5 ultrasonic sensor into the sensor bracket and run the sensor cable either through hole in the back or through the side cut-out and behind the bracket. Ensure the cable is clear of moving parts and will not be damaged during folding.

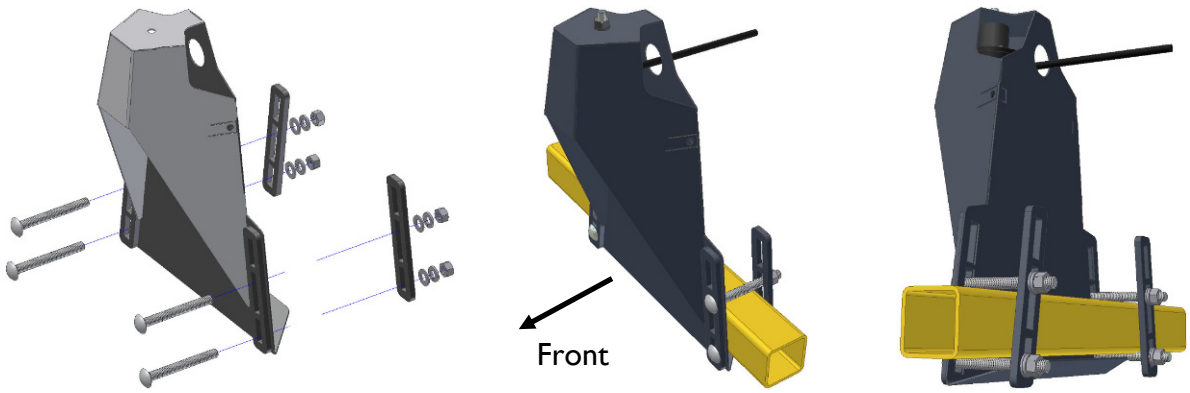

Figure 8: Bracket Mounting Example

6. Exhaust clamps (B16) can be used if mounting the sensor brackets to a portion of the boom with round tubing.

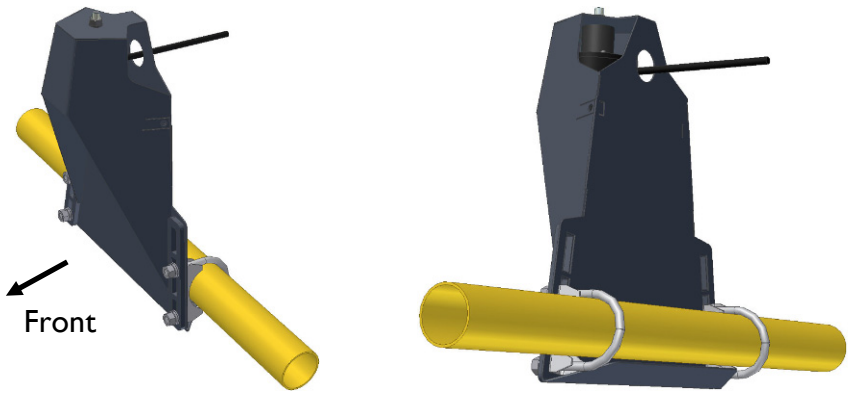

Figure 9: Bracket Mounted with Exhaust Clamps

6.5 Main Lift Sensor Installation

1. The main lift mounting bracket (B21) is the bracket with the longer mounting flange.

2. There are a variety of ways to mount the main lift bracket on most sprayers. The bracket should position the sensor approximately in the center of the sprayer, forward of the boom. An example of this mounting is illustrated in **Figure 11**.

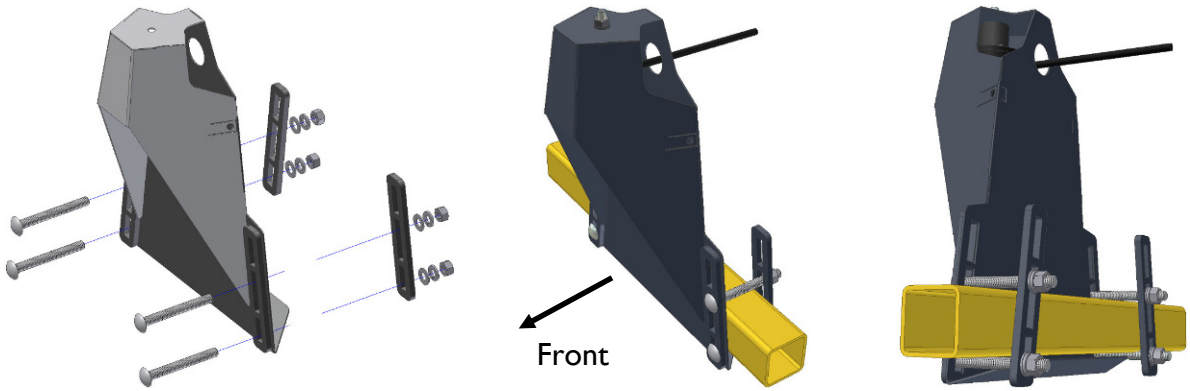

Figure 10: Bracket Mounting Example

3. Mount the ultrasonic sensor to the main lift bracket. Run the sensor cable through hole and behind the bracket.

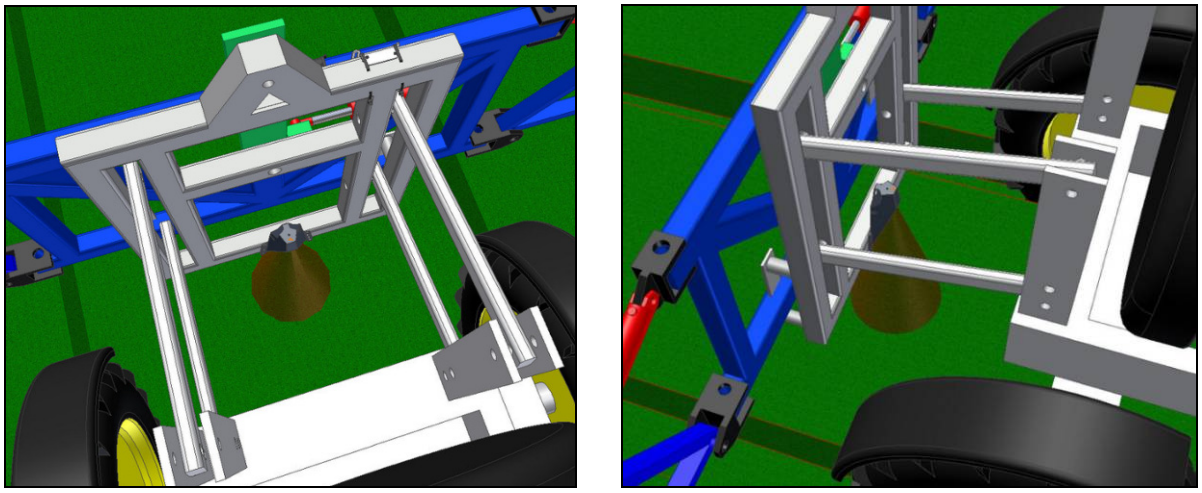

Figure 11: Example Mounting of the Main Lift Bracket

⚠ Important

Avoid mounting the main lift sensor over or near a wheel-track. Measurements from the wheel-track do not provide an accurate crop height and will cause measurement and control error.

Ensure the bracket does not collide with any other part of the sprayer throughout the full range of main lift motion.

7 Roll Sensor Installation

7.1 Bracket Assembly

1. Securely mount the roll sensors to the included roll sensor brackets using the #6 machine screws. Tighten screws to 10 in-lbs (1.1 Nm).

2. The orientation of the mounted roll sensor to the roll sensor bracket will depend on the bracket mounting. The roll sensor CANbus connector must be pointing towards the right side of the sprayer (when looking from the rear of the sprayer).

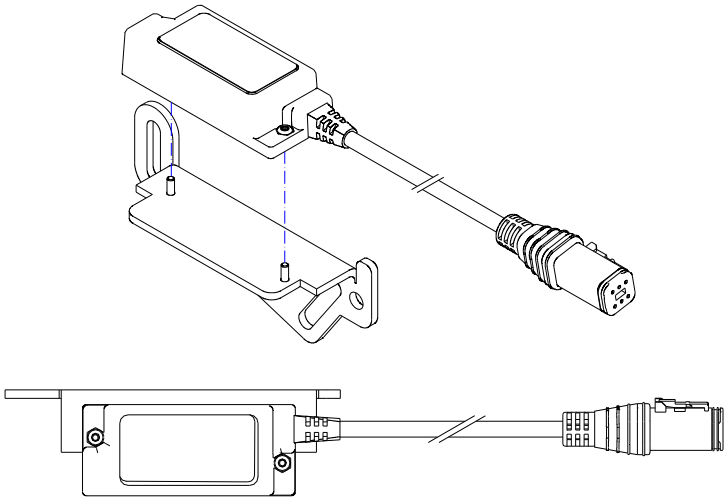

Figure 12: Mounting Roll Sensor to Bracket

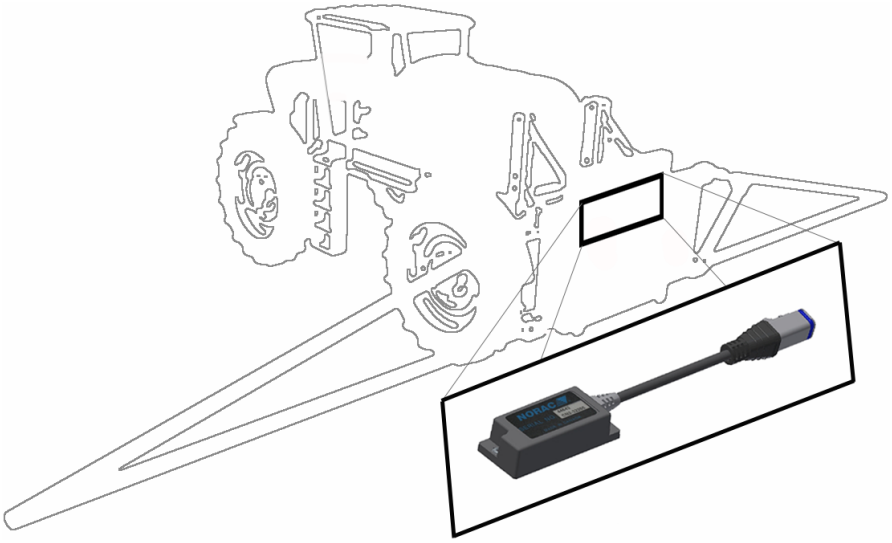

Figure 13: Roll Sensor Orientation - Connector Facing Right Wing

7.2 Roll Sensor Mounting Guidelines: Center Pivot Booms

1. When mounting the roll sensors, mount one to the boom frame and one to the chassis (non-pivoting portion of the sprayer). For optimal performance, minimize the distance between the roll sensors (A) and minimize the height from each roll sensor to the pivot point (B).

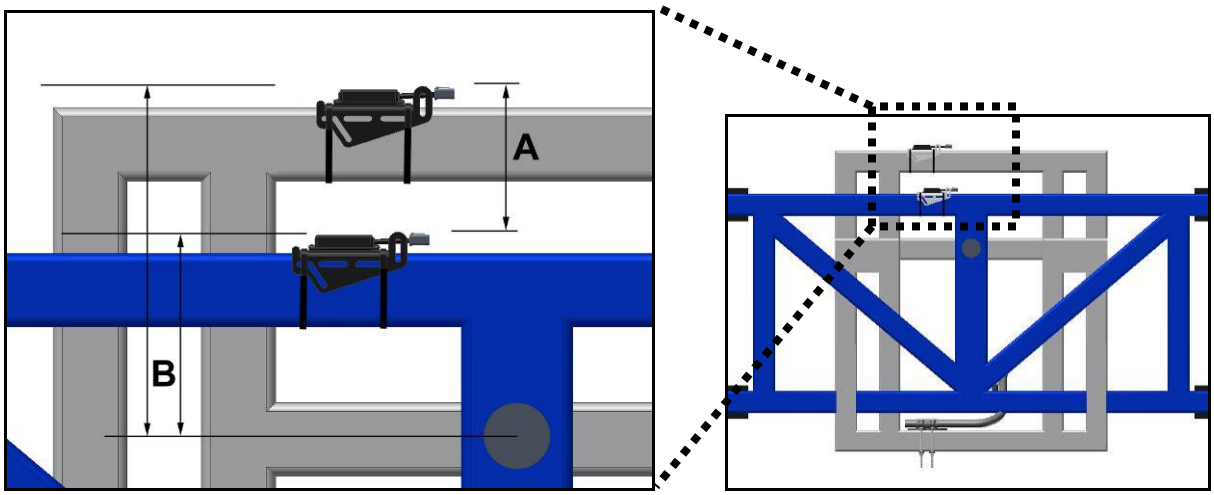

Figure 14: Roll Sensor Mounting on a Center Pivot Suspended Boom

2. Ensure the roll sensors are relatively level when the sprayer boom and chassis are level.

3. Both roll sensor cables should be pointing towards the right hand wing of the sprayer.

4. Ensure both roll sensors are mounted adequately and that the cables provide enough slack to allow sufficient boom roll.

5. The chassis roll sensor can also be mounted inverted to minimize the distance between the roll sensors (**Figure 15**).

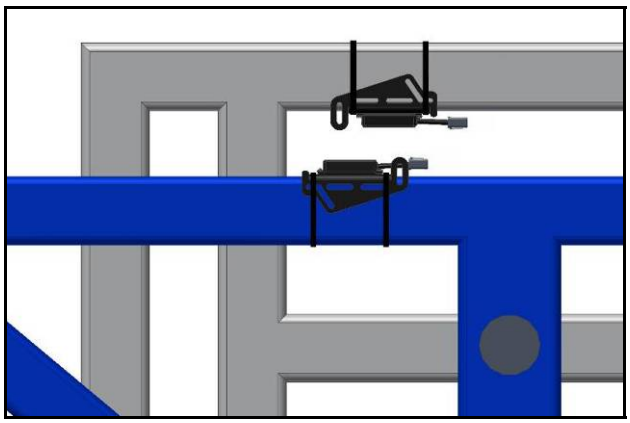

Figure 15: Inverted Chassis Roll Sensor Mounting on a Center Pivot Suspended Boom

7.3 Roll Sensor Mounting on a John Deere Sprayer

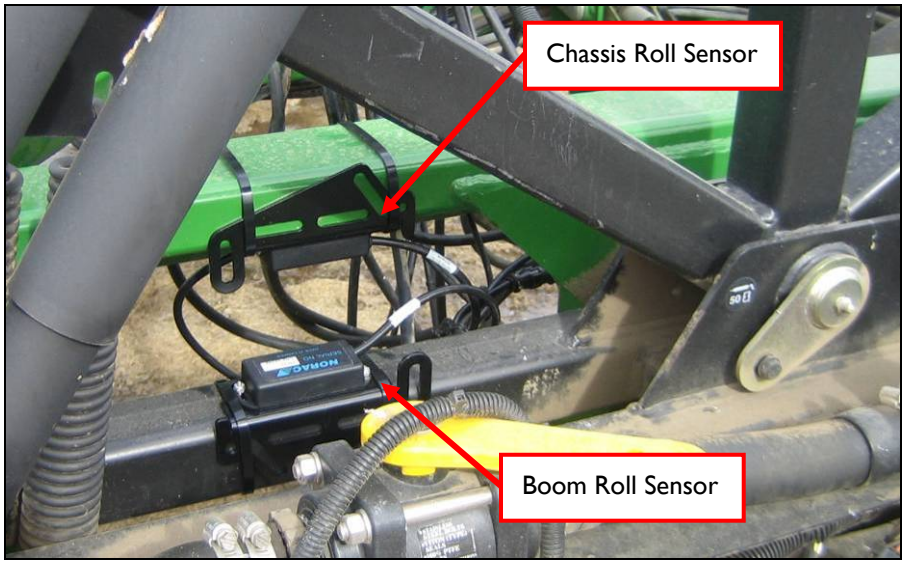

Figure 16: Roll Sensor Mounting (Viewed from the rear of sprayer)

8 Module Installation

An optional module mounting bracket kit is available for purchase from NORAC. The mounting brackets are compatible with control modules and input modules. One kit is needed per module.

Item	Part Number	Name	Quantity
B20	43708	UC5 MOUNTING BRACKET KIT (CONTROL AND INPUT MODULES)	1

8.1 Control Module

1. Refer to **Figure 1** and **Figure 17**.

2. Securely mount the control module (E01) inside the sprayer cab using screws, cable ties or optional brackets.

3. Connect the display terminal to the control module using the display cable. This cable must be connected to the end of the control module with only one Deutsch connector.

4. Connect the power cable (C30) to one of the two CANbus connectors on the control module. Connect the other end of the power cable to the John Deere power bar inside the cab.

5. Route cable C01 from the other CANbus connector towards the rear of the sprayer.

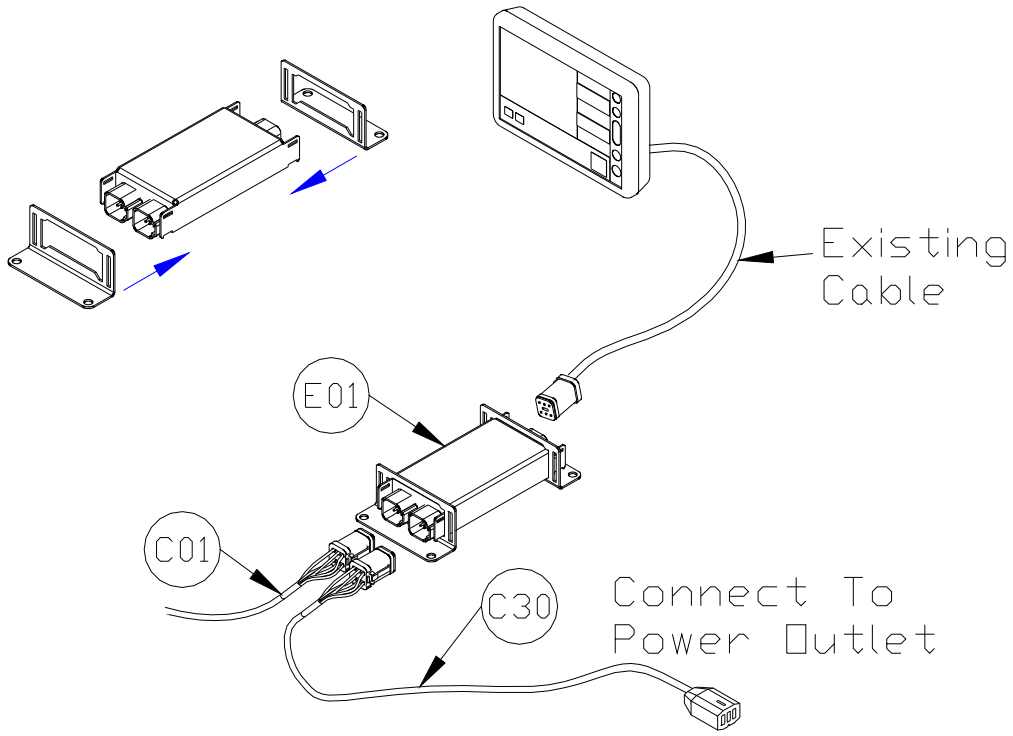

Figure 17: Control Module Mounting

8.2 Valve Module

1. Install the valve module (E02) to the top of the NORAC valve block. Orient the 6-pin Deutsch (CANbus) connectors towards the "P" and "T" ports with the label facing up.

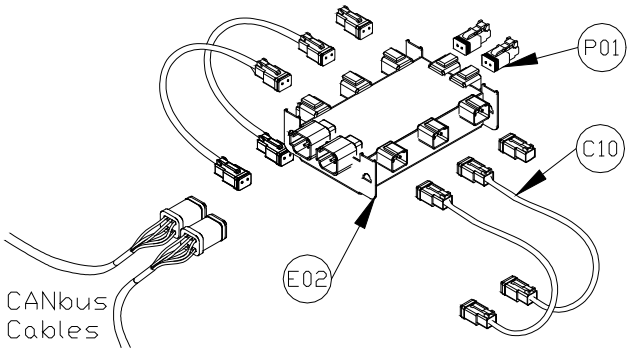

Output Number	Normal Function
1	Left Up
2	Left Down
3	Right Up
4	Right Down
5	Option 1
6	Option 2
7	Option 3
8	Option 4

Figure 18: Valve Module

2. Verify the valve coil connectors are oriented vertically (**Figure 19**).

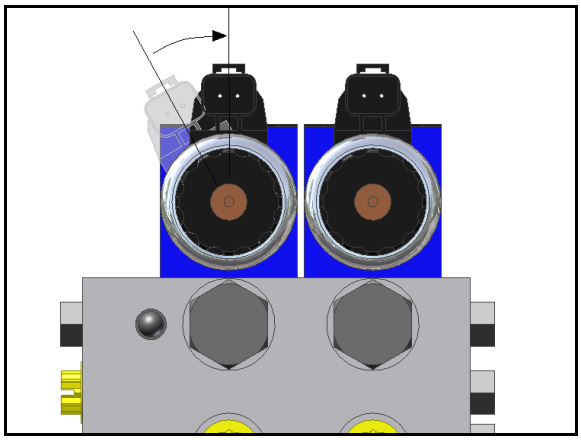

Figure 19: Align Coils

3. Place the valve module between the valve coils. Slide a valve mounting bracket over the connectors of the valve module and the valve coil connectors. This may require flexing the plastic bracket slightly (**Figure 20**).

4. Ensure the bracket is pushed over the connectors far enough to allow the clips to engage behind the valve connectors.

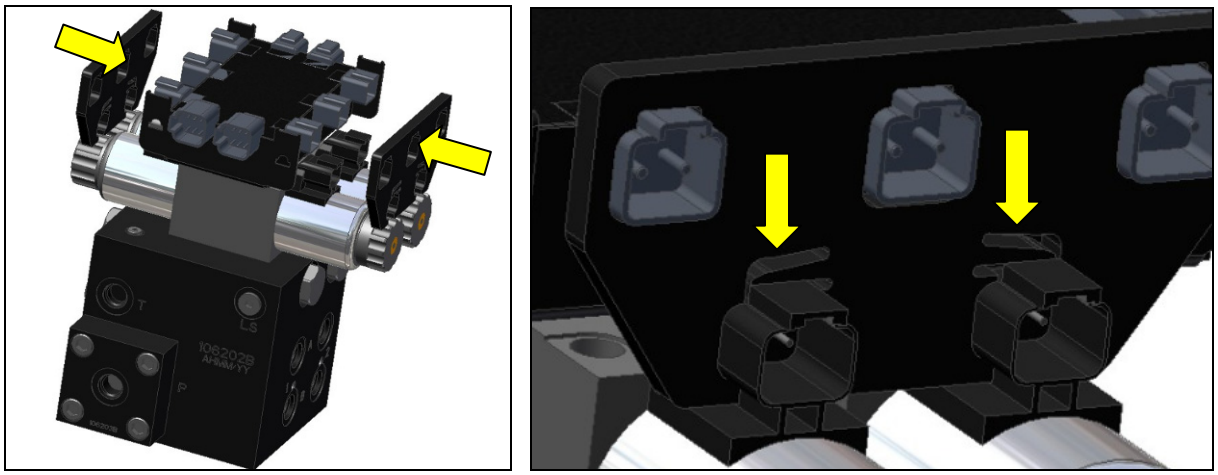

Figure 20: Valve Module Bracket Installation

5. Connect the valve module CANbus to cable C01 from the control module. Route cable C02 from the other CANbus connector to the input module.

6. With the valve module securely mounted to the valve block, connect the valve cables (C10), to the valve coils as illustrated in **Figure 21**. Insert the 2-pin plugs (P01) into the unused 2-pin connectors on the valve module.

7. Connect the temperature probe to the valve block using the supplied 3/8" x 1/2" hex bolt.

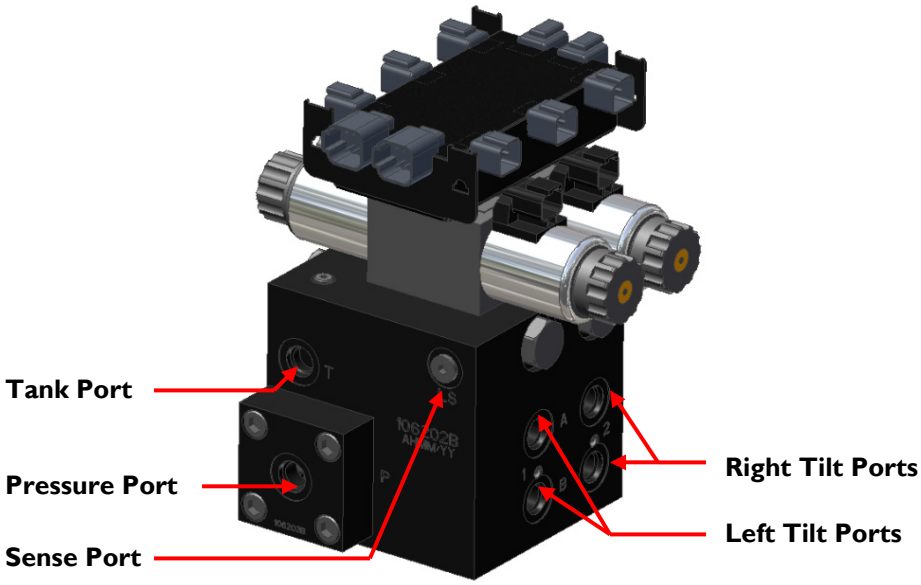

Figure 21: Valve Module - Valve Coil Connections

8.3 Input Module

1. Install the input module (E03) on the boom near the John Deere valve block. Secure it to the boom using cable ties or optional brackets.

2. Connect the CANbus cable (C02) from the valve module to the input module.

3. Insert the 12 pin plug (P02) into the *OEM 3* connector on the end of the input module.

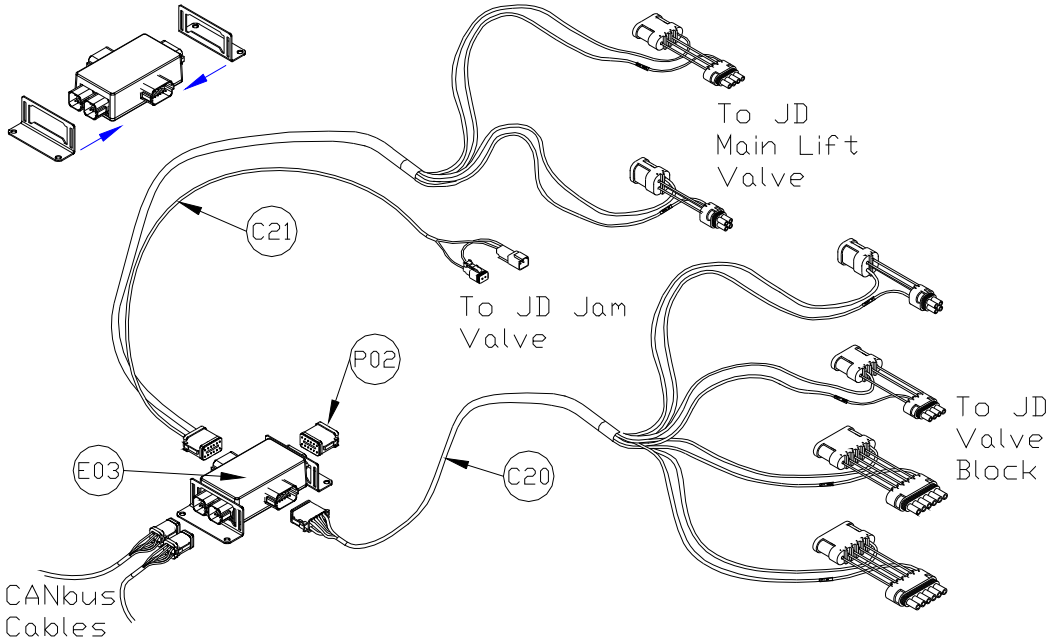

Figure 22: Input Module Connections

4. Connect the 12 pin connector on the tilt interface cable (C20) to the *Thru 2* connector on the side of the input module. Insert the other connectors on C20 into the tilt connectors on the John Deere solenoids.

5. Connect the 12 pin connector on the main lift interface cable (C21) to the *Thru 1* connector on the side of the input module. Insert the other connectors on C21 into the main lift connectors on the John Deere solenoids.

6. Connect the two Deutsch connectors on the long cable on C21 together. Coil the cable up and tie it where it will not interfere or catch on anything. These connectors are not used.

⚠ Important

There is one set of different connectors included with the tilt interface cable. Some John Deere sprayers use this connector on the left down function. If the sprayer has this connector, remove the existing connectors using the included pin removal tool. Insert the wires into the new connector and ensure they are in the same position as they were in the previous connector.

9 Connecting the Sensors to the CANbus

1. Route cable C03 from the input module to the 8-way coupler (E11).

2. Connect both roll sensors to the 8-way coupler. Fasten the 8-way coupler to the boom with cable ties.

3. Connect the main lift sensor to the 8-way coupler using cable C02 and a 2-way coupler (E12). Cable C02 and item E12 may not be needed if the 8-way coupler is mounted close enough to the main lift sensor.

4. Connect two cables (C05) to the 8-way coupler and route along the booms to the wing sensors. Follow existing cables and hoses to be sure the cable will not be pinched or stretched.

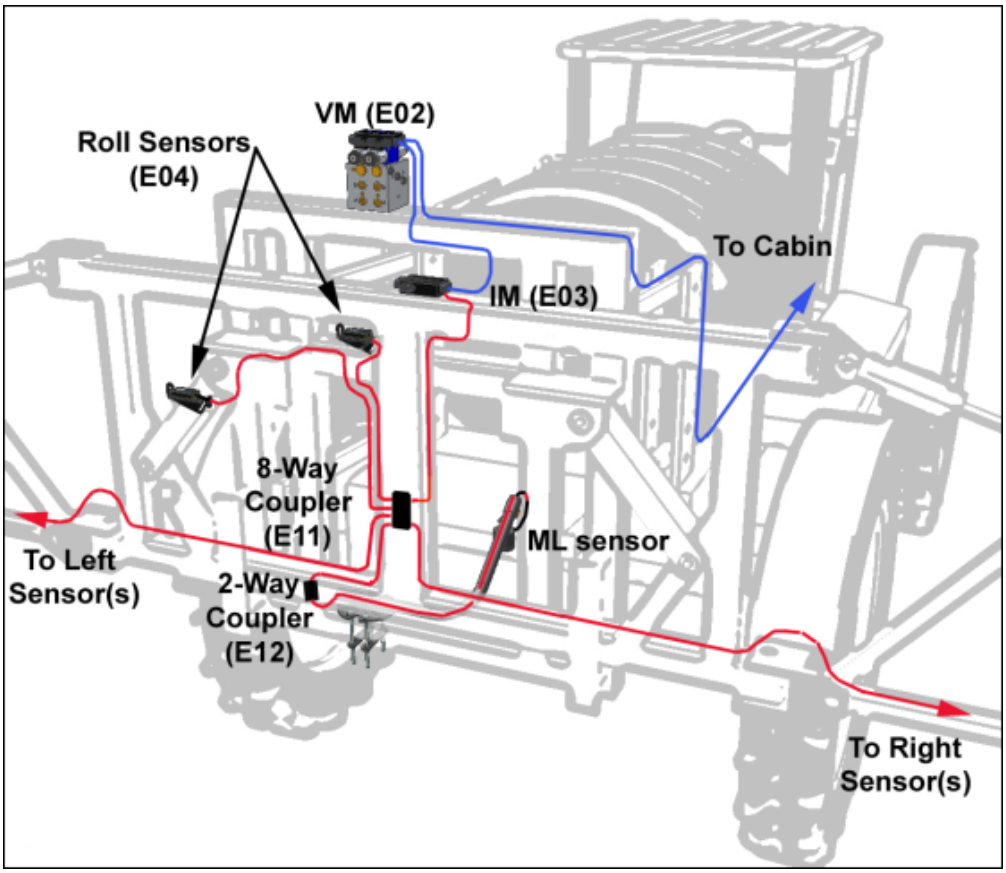

Figure 23: UC5 Module Locations and Cable Connections

5. At the sensor brackets, attach a 2-way coupler with terminator (E20) to the sprayer boom. The 2-way coupler with terminator is the white two way coupler. Plug the sensor and the CANbus cable into the 2-way coupler.

⚠ Important

Ensure that all unused connectors are plugged with the plugs provided.

10 Hydraulic Installation

Warning!

Ensure all pressure has been bled from the system before disconnecting any lines or fittings. Hydraulic pressure will exist on the wing tilt circuits unless the wings are being supported by other means. The hydraulic installation may be performed with the wings in transport position, resting on the ground or with the tilt cylinders fully extended.

Important

Component failure due to oil contamination is not covered under the NORAC UC5 system warranty. It is recommended that a qualified technician perform the hydraulic installation.

10.1 Valve Assembly

1. On a clean surface remove the plastic plugs from the block.
2. Install the 6MB-6MOR (F05) fittings into the "P" and "T" ports. Tighten to 18 ft-lbs (24 Nm).
3. Install the 4MB-4MOR (F06) fitting into the "S" port. Tighten to 11 ft-lbs (15 Nm).
4. Install the 6MB-6MOR (F05) fittings into the "A" and "B" ports. Tighten to 18 ft-lbs (24 Nm).
5. Orifices are not installed in the NORAC valve block for this sprayer since the John Deere orifices in the wing cylinders are used.

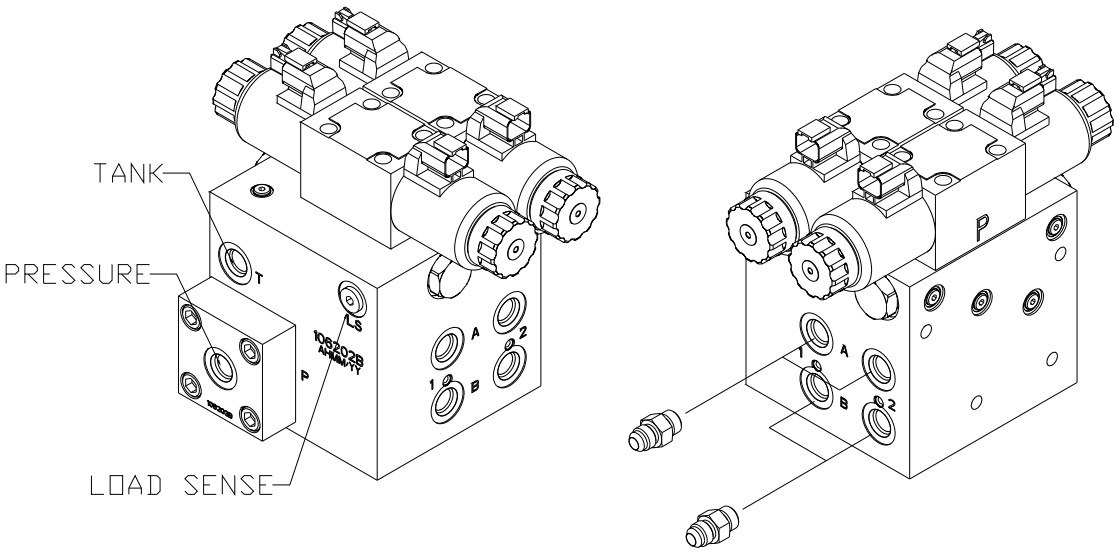

Figure 24: NORAC Valve Block Details

6. Remove the plug from the Sense Line Bleed port. Location is shown in **Figure 25**. Gently tap the plug with a hammer to loosen it before attempting to remove it.

7. Remove the Sense Line Bleed Orifice and discard. **Figure 25**. Install the setscrew (**F11**) into the Sense Line Bleed Orifice location. Ensure the setscrew is threaded entirely into the hole and tightened to 35-40 in-lbs to ensure a tight seal. Reinstall the plug and tighten to 35-40 in-lbs.

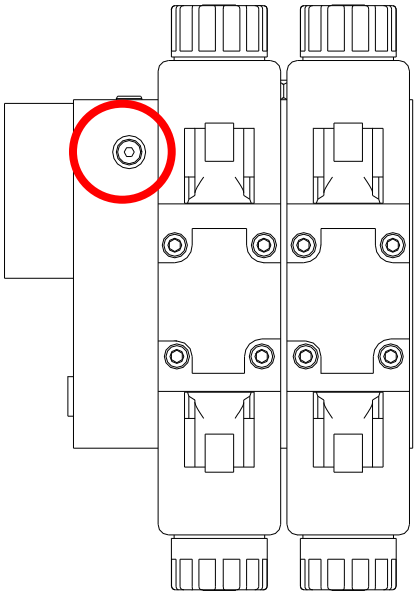

Figure 25: Load Sense Bleed Orifice Location on Top of Block

10.2 Valve Block Mounting

1. A good mounting location for the valve block on the John Deere is illustrated in **Figure 26**.

2. Insert the threaded rod into the block and use a hex nut to hold the rod. The block holes are 3/8" NC-1" deep. If bolts are used instead of the threaded rod, ensure the bolts thread in at least 3/8".

3. Use the remaining hardware to secure the block to the sprayer.

4. Cut off excess threaded rod, if necessary.

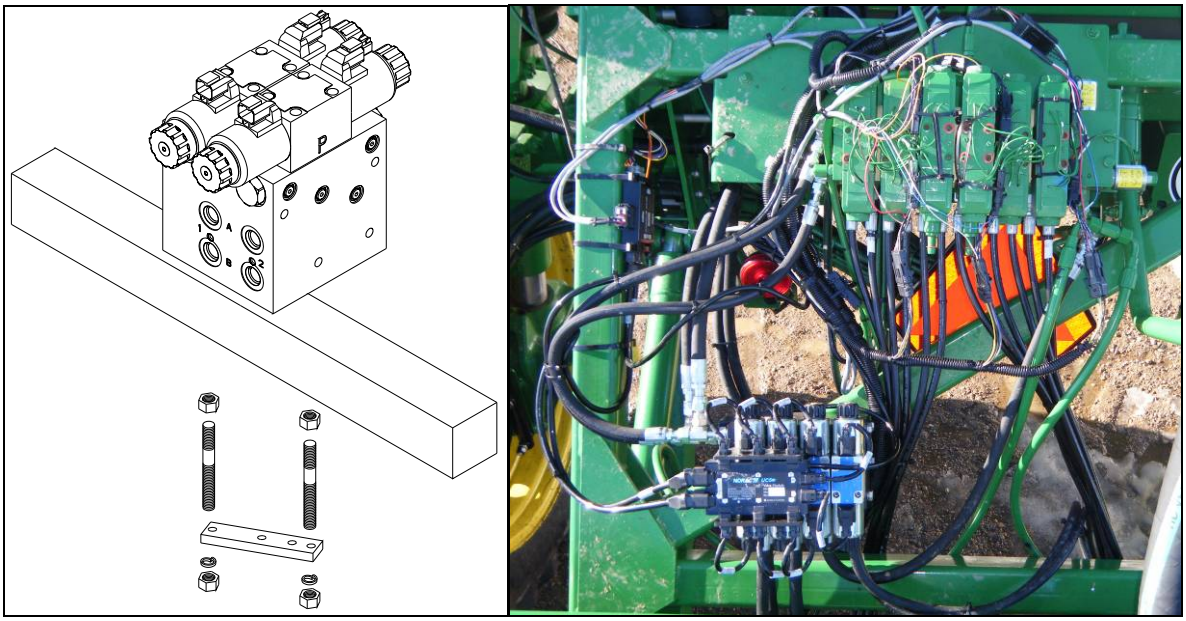

Figure 26: Valve Block Mounting

10.3 Hydraulic Plumbing

Warning!

From this point on in the installation the booms will be inoperative until the hydraulics are fully installed.

1. After the NORAC valve is mounted, the hydraulic hoses and fittings can be plumbed. The plumbing for the hydraulic circuit is shown schematically in **Figure 3.**

2. Connect the NORAC supplied hoses (H03) to the pressure and tank ports on the NORAC valve block (V01). Tee the hoses (H03) into the ports on the sprayer valve block with 6FORXR-6MORT fittings (F03) and 6MB-6MOR fittings (F05). The elbow fittings currently in place must be replaced by the 6MB-6MOR fitting (F05).

3. Disconnect the existing hoses from the tilt cylinders. Remove the existing 90 degree fitting on the rod end of each cylinder as well. Install a 6FORXR-6MORT fitting (F03) onto the ports of each tilt cylinder. Reconnect the cylinder hoses and 90 degree fittings to the newly installed tees.

4. Connect one end of hoses H02 to the F03 fittings on the LEFT tilt cylinder. Connect the other end of hoses H02 to the NORAC valve block "A" and "B" ports.

5. Connect one end of hoses H04 to the F03 fittings on the RIGHT tilt cylinder. Connect the other end of hoses H04 to the NORAC valve block "A" and "B" ports.

6. The "raise" lines must be connected to the "B" ports of the NORAC valve block. The "lower" lines must be connected to the "A" ports of the NORAC valve block.

7. Connect H01 to the load sense port on the valve block.

8. Route the load sense line (H01) to the shuttle valve manifold located underneath the sprayer.

On sprayers manufactured before 2000, the load sense line will be connected on the main John Deere valve block not the shuttle valve manifold. (Figure 31)

9. Tee the load sense line (H01) directly in to the "S" port of the shuttle valve manifold using F03 and F04.

There are multiple versions of JD load sense blocks on sprayers. Choose the picture that most closely resembles the sprayer valve block and tee in accordingly.

On some installs the Load sense hose (H01) may be too long and the excess hose must be coiled and secured where it will not interfere with other components.

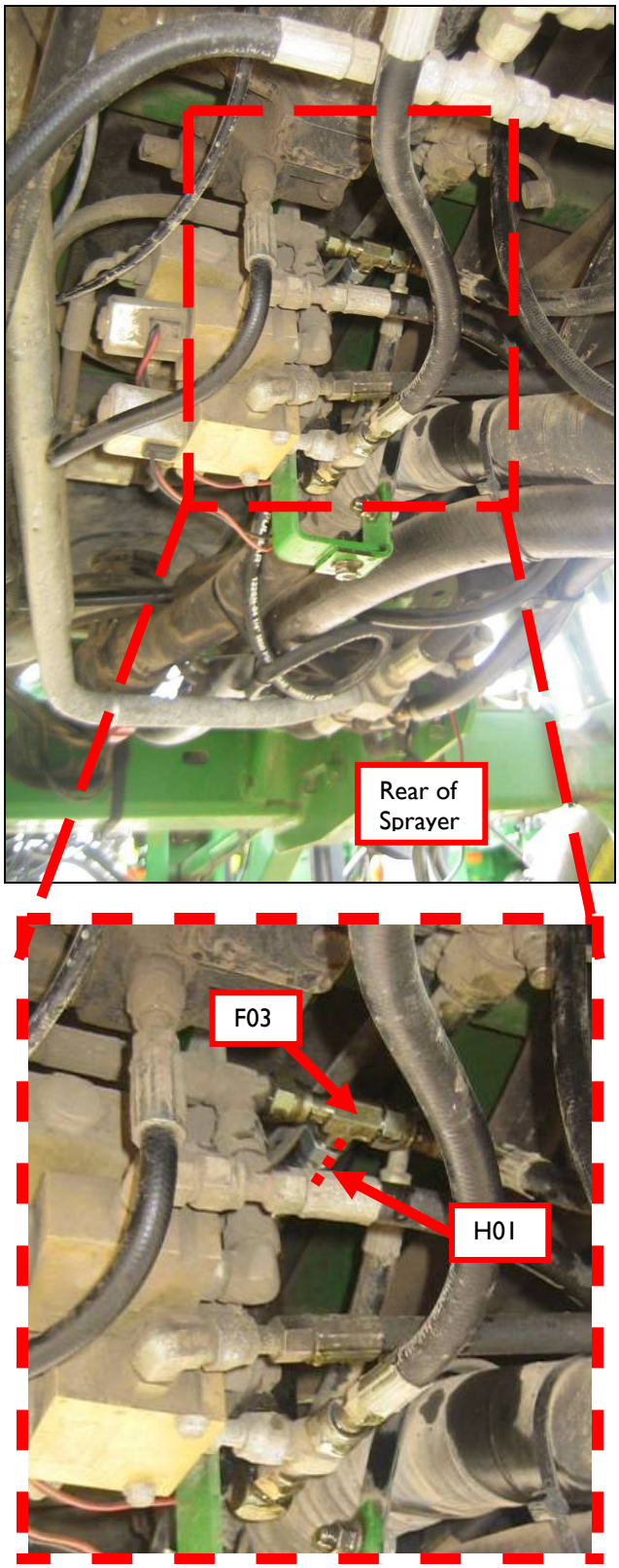

Figure 27: Looking towards the rear of the sprayer on a JD4700, JD4710

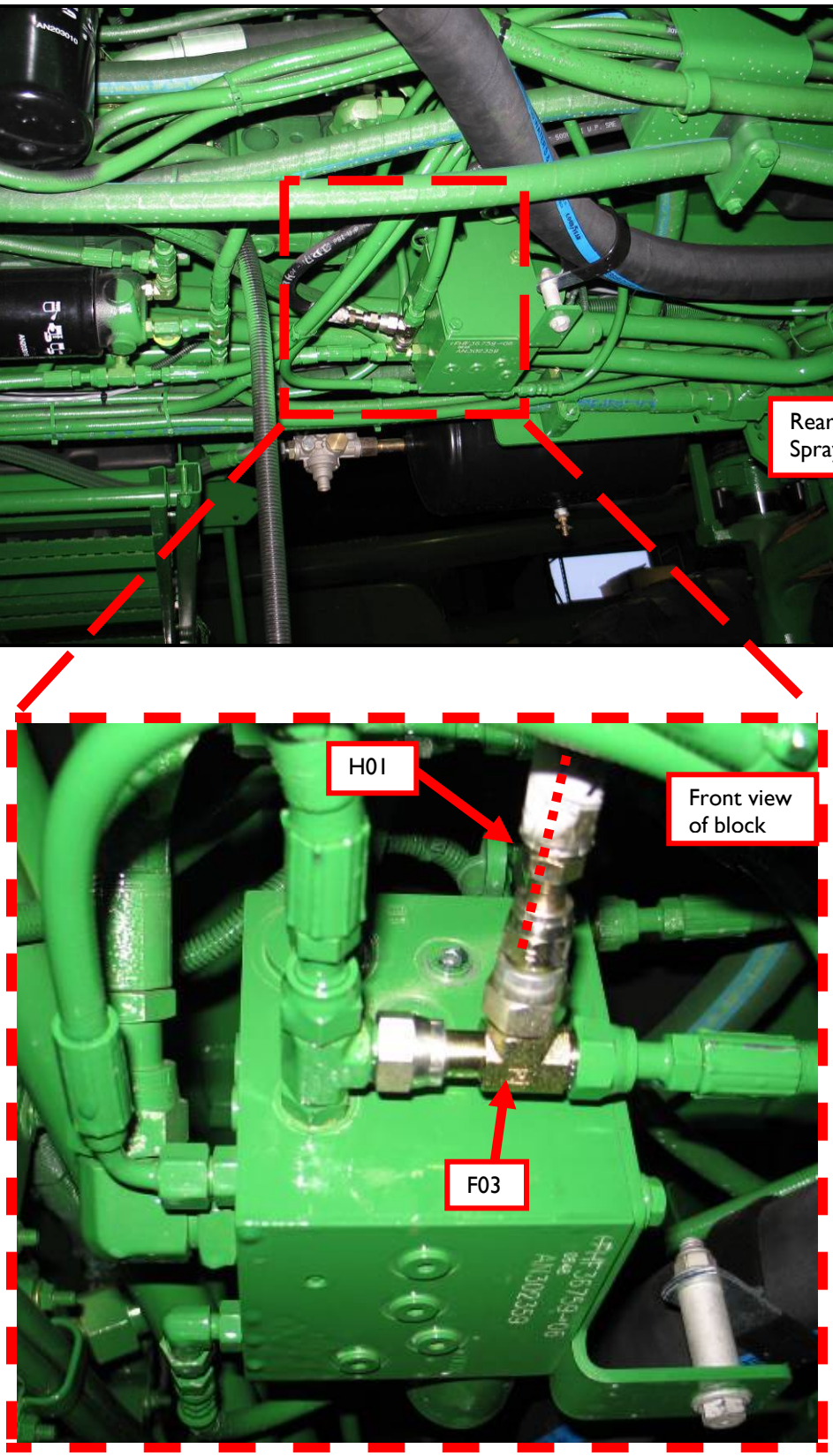

Figure 28: Load Sense Plumbing on some JD4710

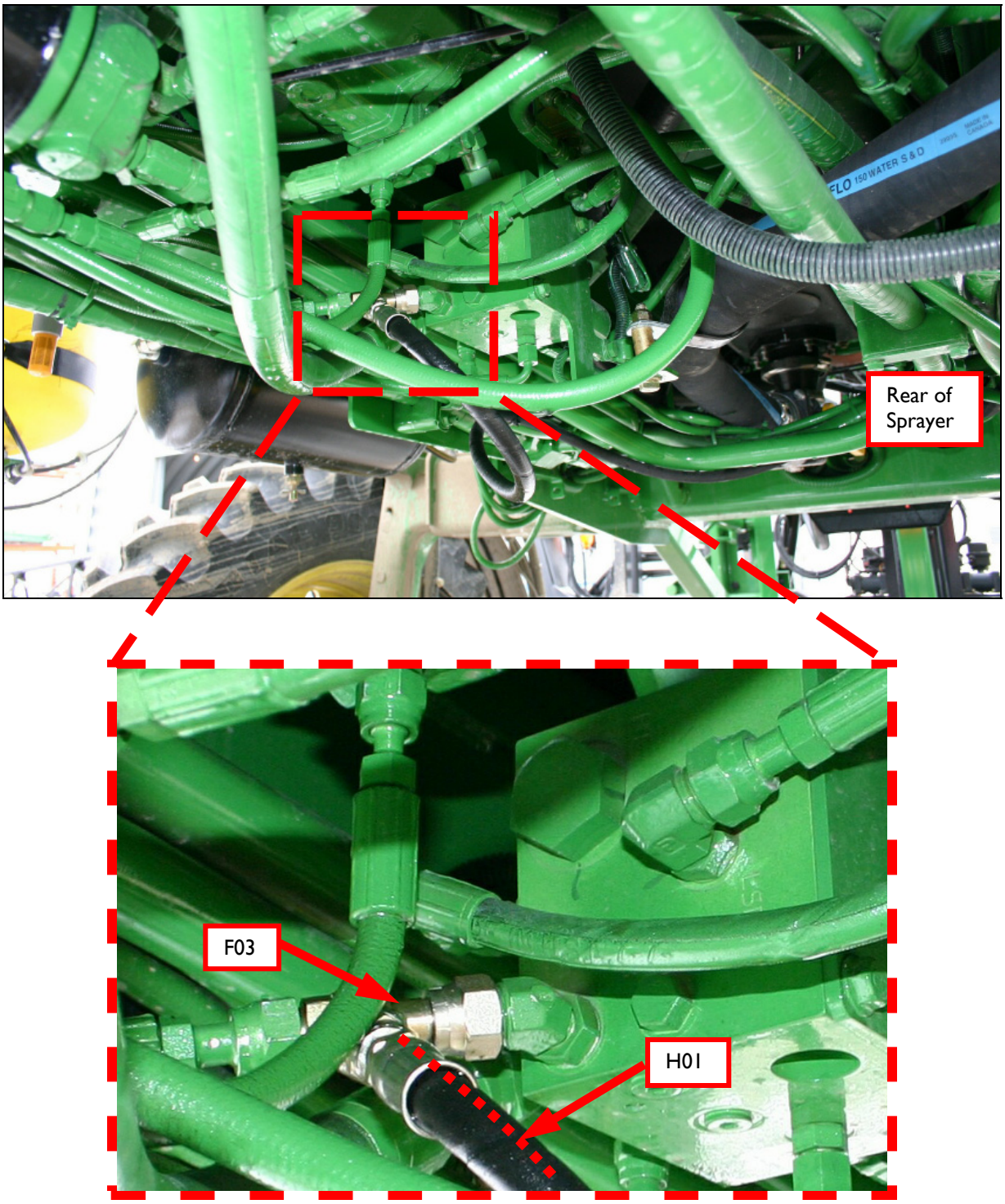

Figure 29: Load Sense Line Connection to John Deere Combination Valve Block

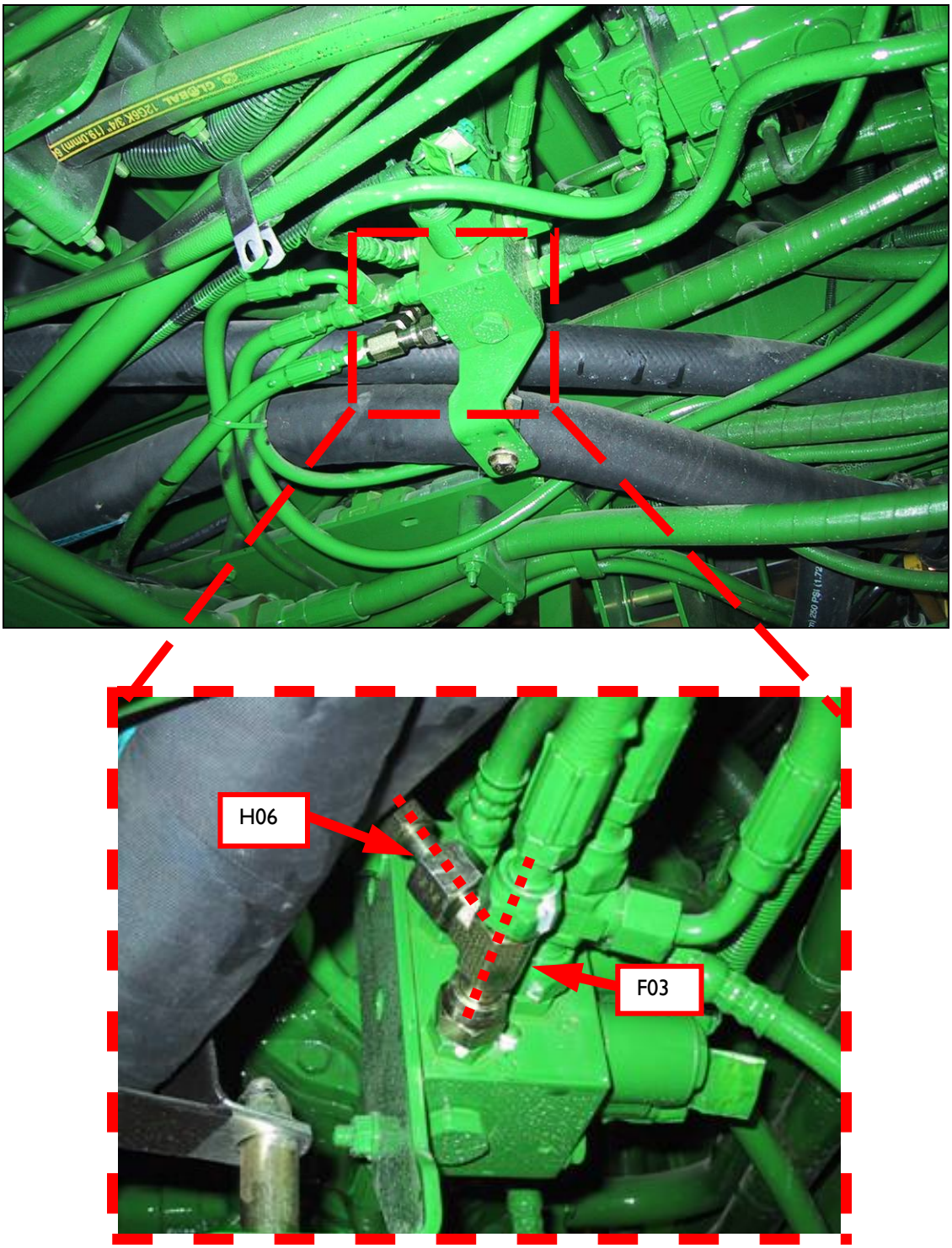

Figure 30: 2003+ Load Sense Line Connection

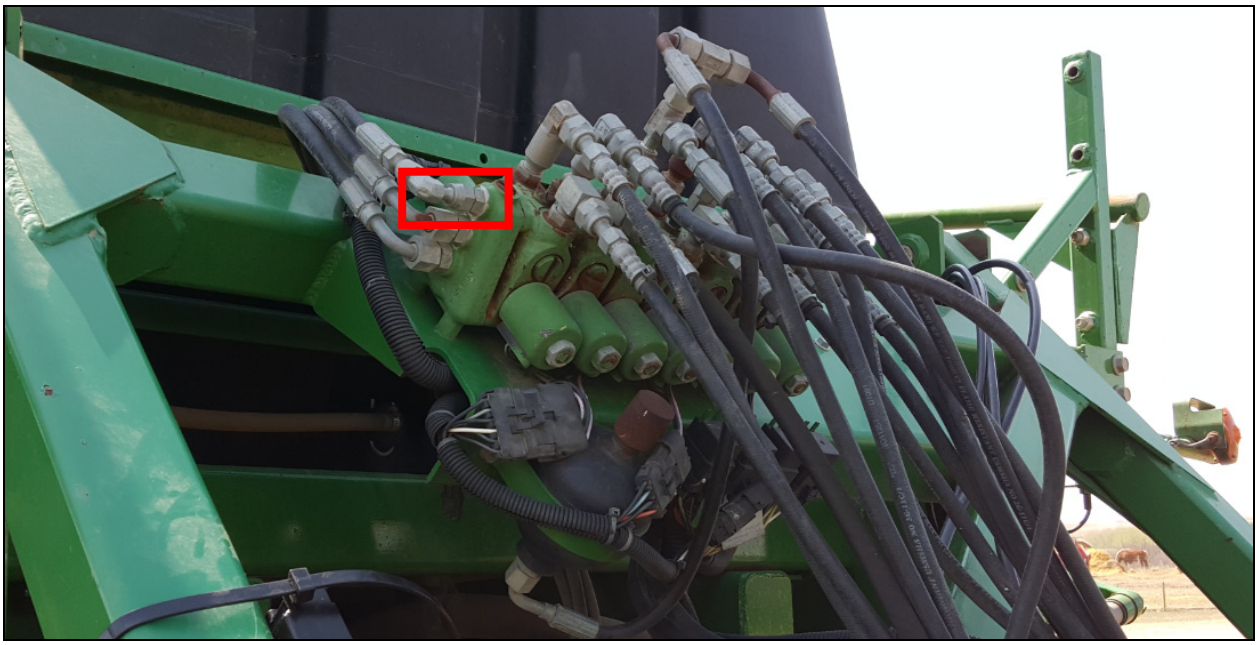

Figure 31: Load Sense Connection on Pre-2000 Sprayers

11 Software Setup

1. Start up the sprayer and test the sprayer's functionality. The display terminal does not need to be powered on for the original boom function switches to operate. Unfold the booms and raise/lower each boom and the main section.

Important

Confirm that the cabling and hoses are agreeable to the entire range of motion.

2. If any functions do not work, review the hydraulic and electrical portions of this manual to check for proper installation.

3. Turn on the power for the display terminal using the switch on the side.

4. The procedure for the installation of the UC5 Spray Height Control system is now complete. Begin the AUTOMATIC SYSTEM SETUP procedure as described in the UC5 Spray Height Control Operator's Manual.

5. Press and hold the brake pedal during the valve setup section (**Figure 32**) of the automatic setup to activate the jam valve.

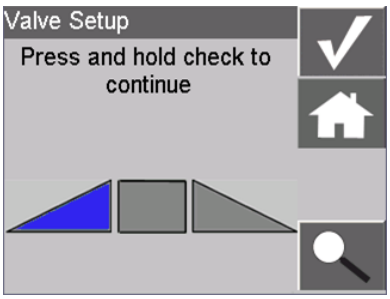

Figure 32: Valve Setup Screen in Automatic Setup

12 Cable Drawings

12.1 ITEM C01: 43220-10 - CABLE UC5 NETWORK 14 AWG - 10M

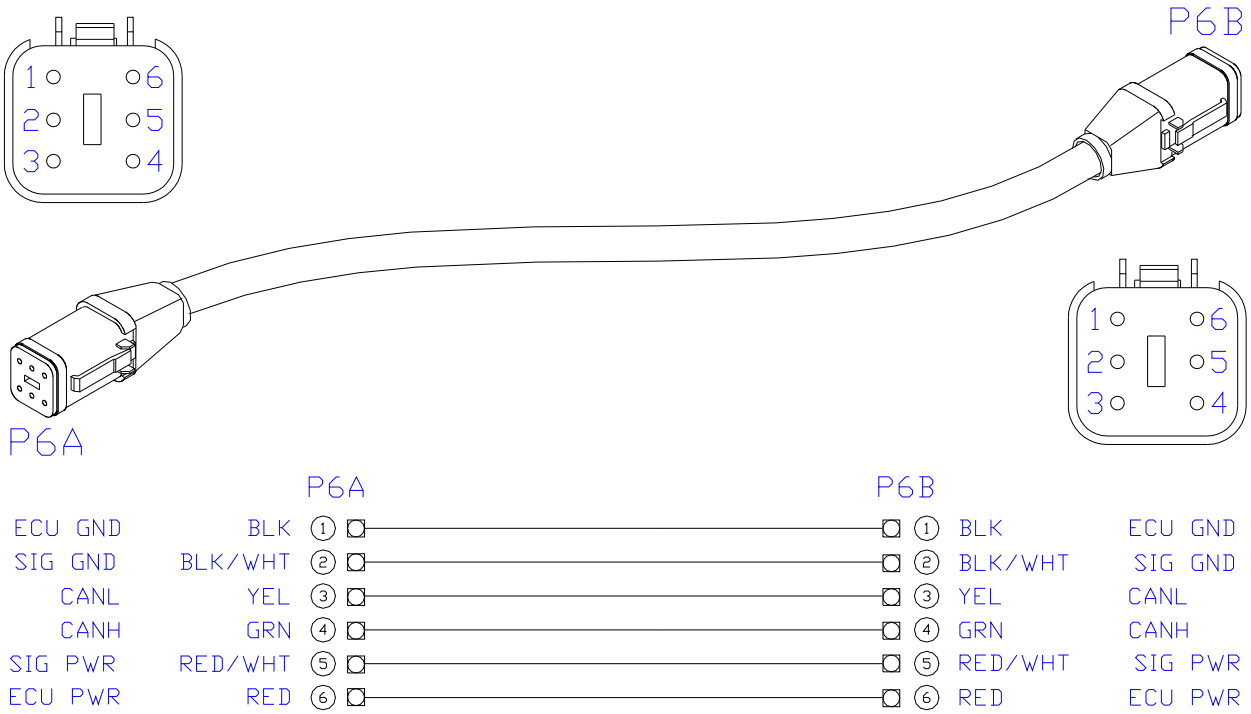

12.2 ITEM C02: 43220-01 - CABLE UC5 NETWORK 14 AWG - 1M

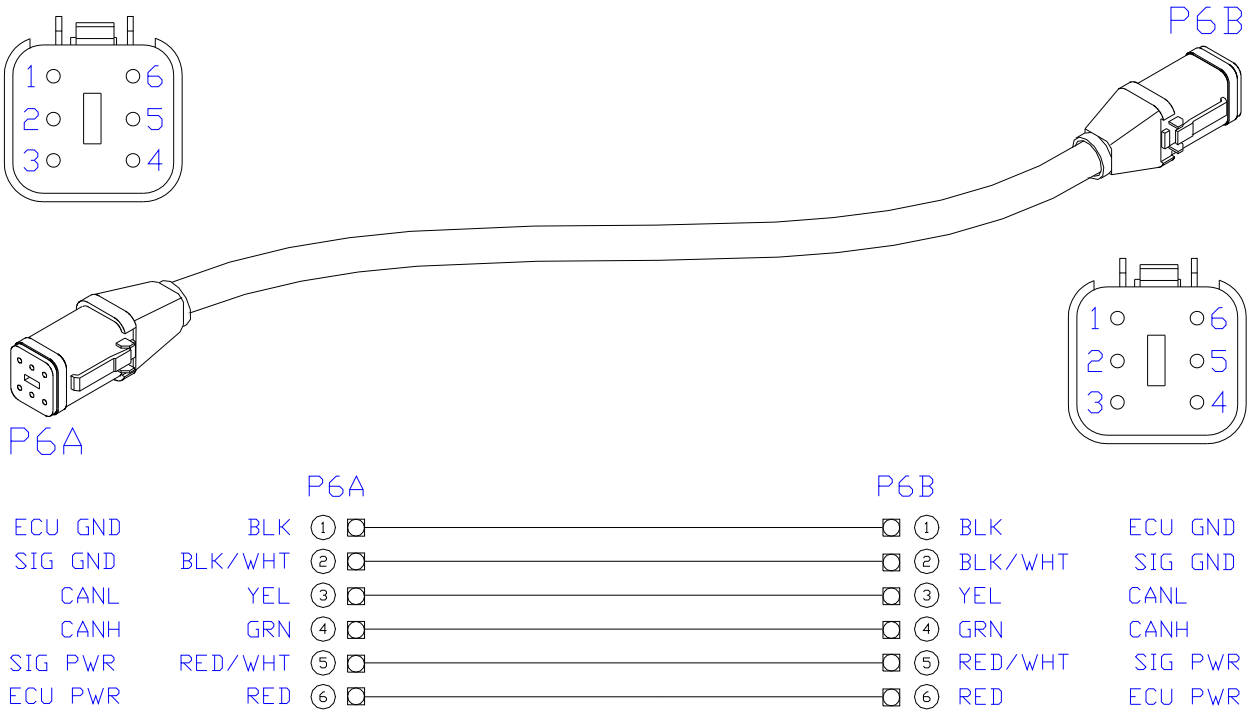

12.3 ITEM C03: 43220-03 - CABLE UC5 NETWORK 14 AWG - 3M

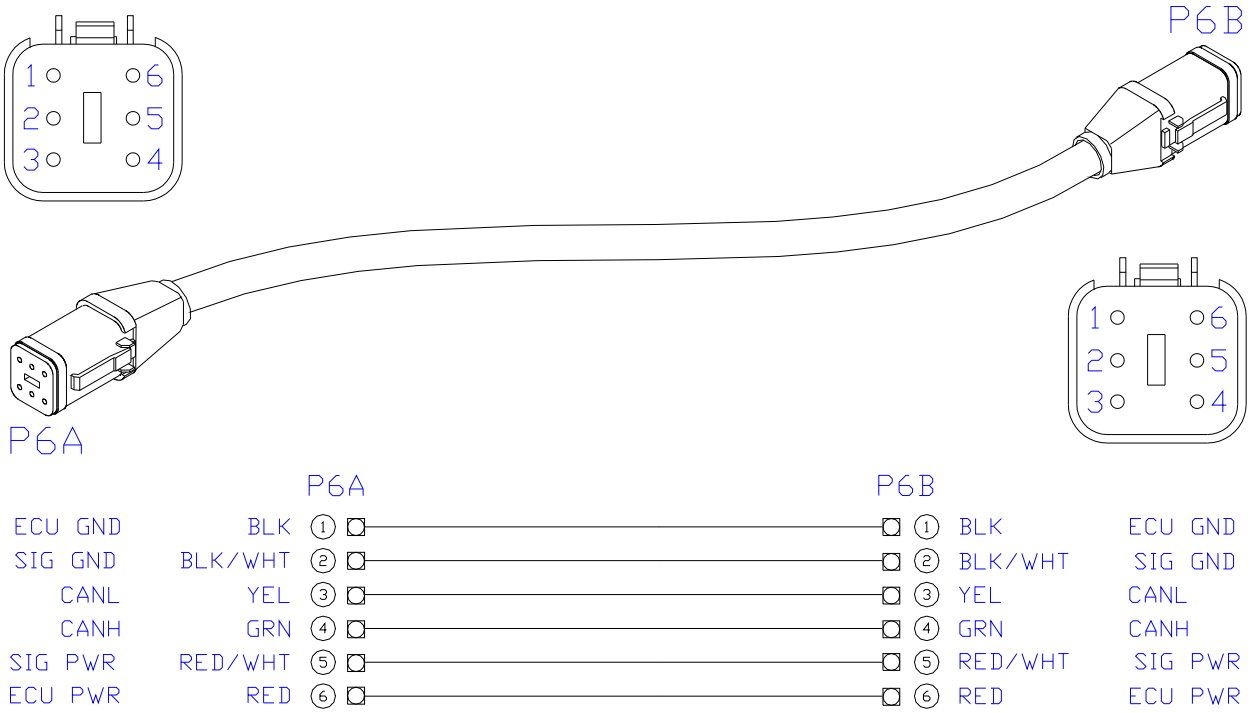

12.4 ITEM C05: 43210-20 - CABLE UC5 NETWORK 18 AWG - 20M

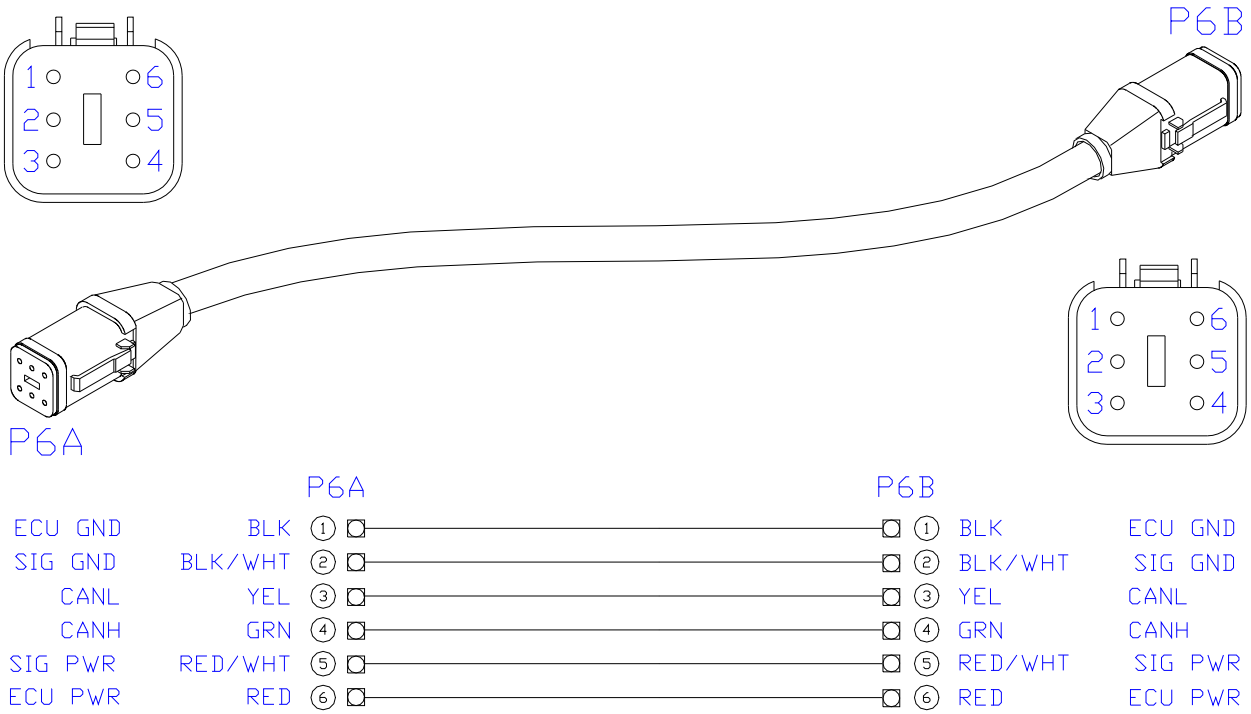

12.5 ITEM C10: 43230-04 – CABLE UC5 VALVE DT TO DT

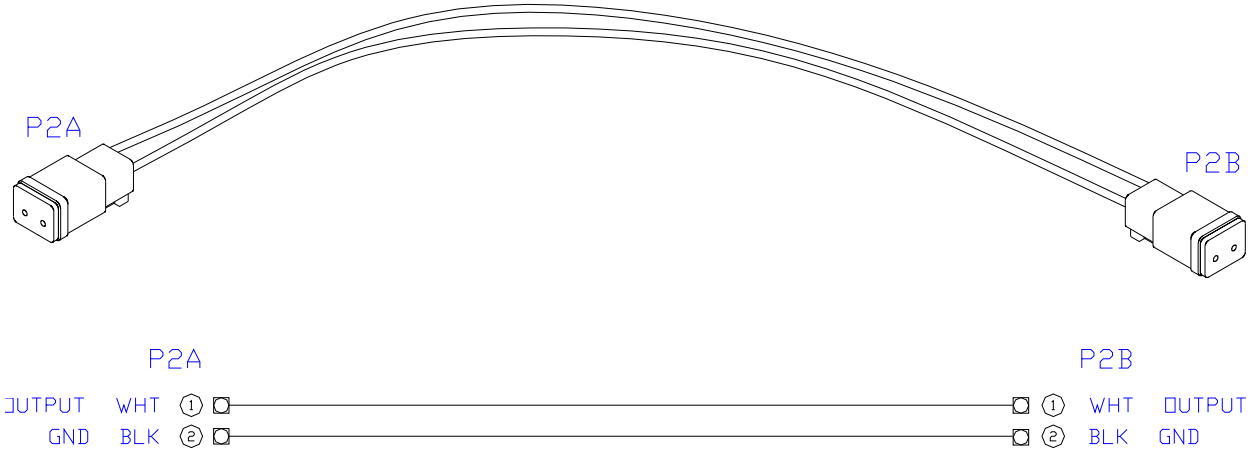

12.6 ITEM C20: 43240-06 – CABLE UC5 INTERFACE TILT JD

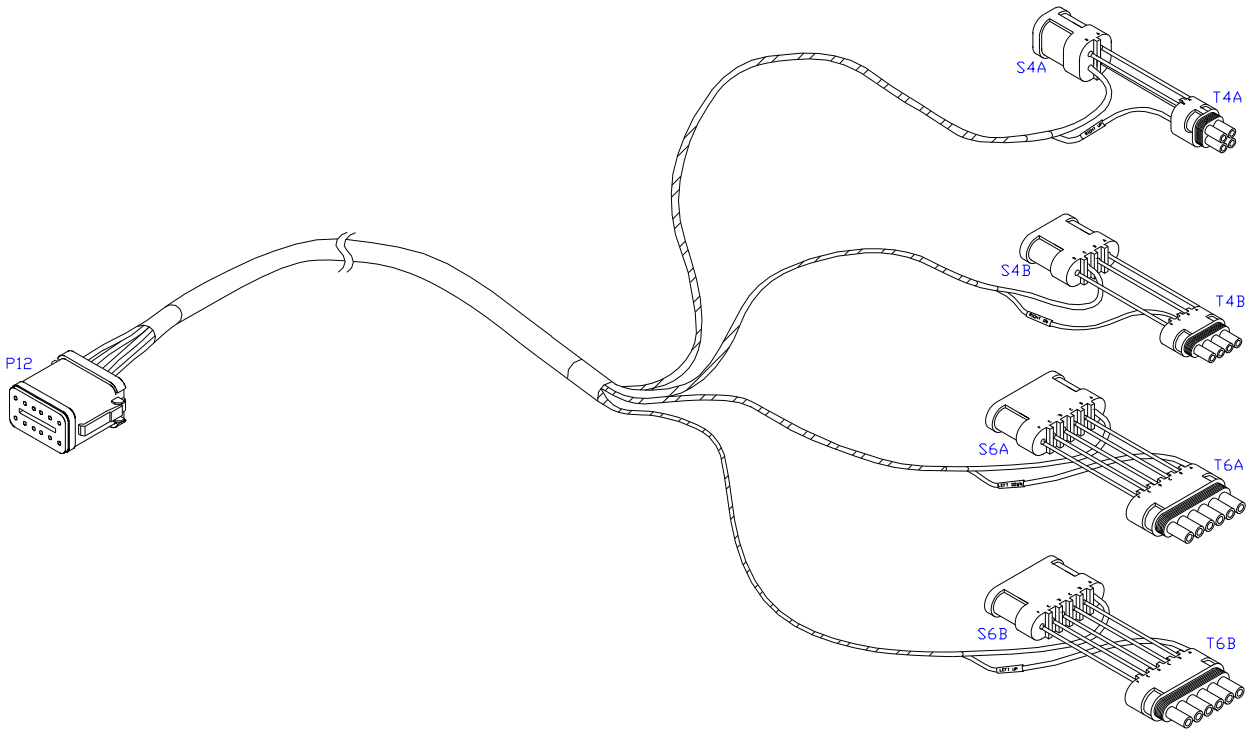

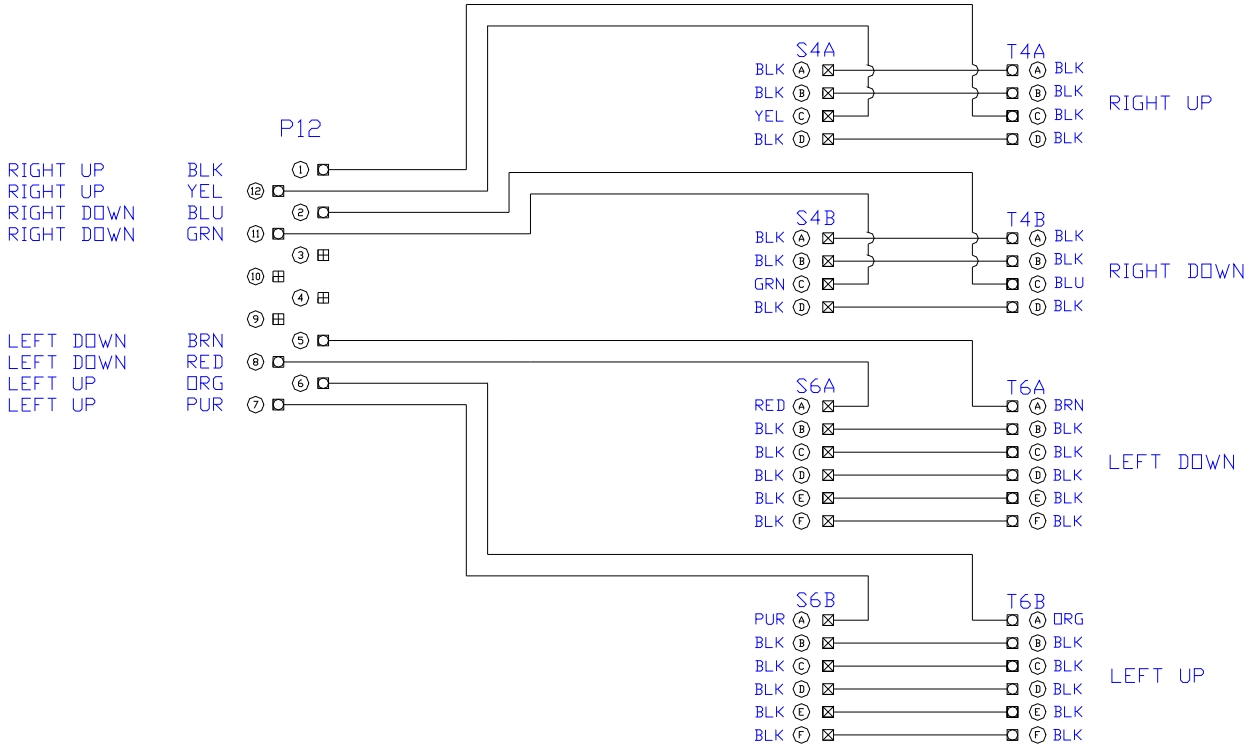

12.7 ITEM C21: 43240-05 – CABLE UC5 INTERFACE MAIN JD

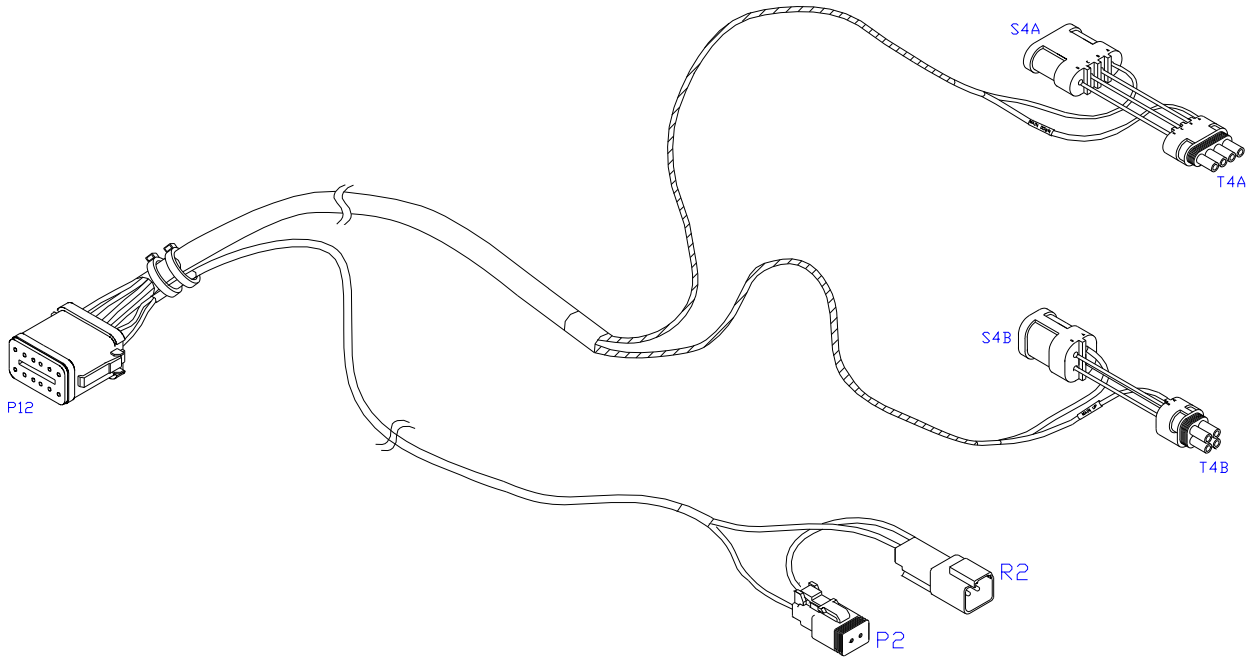

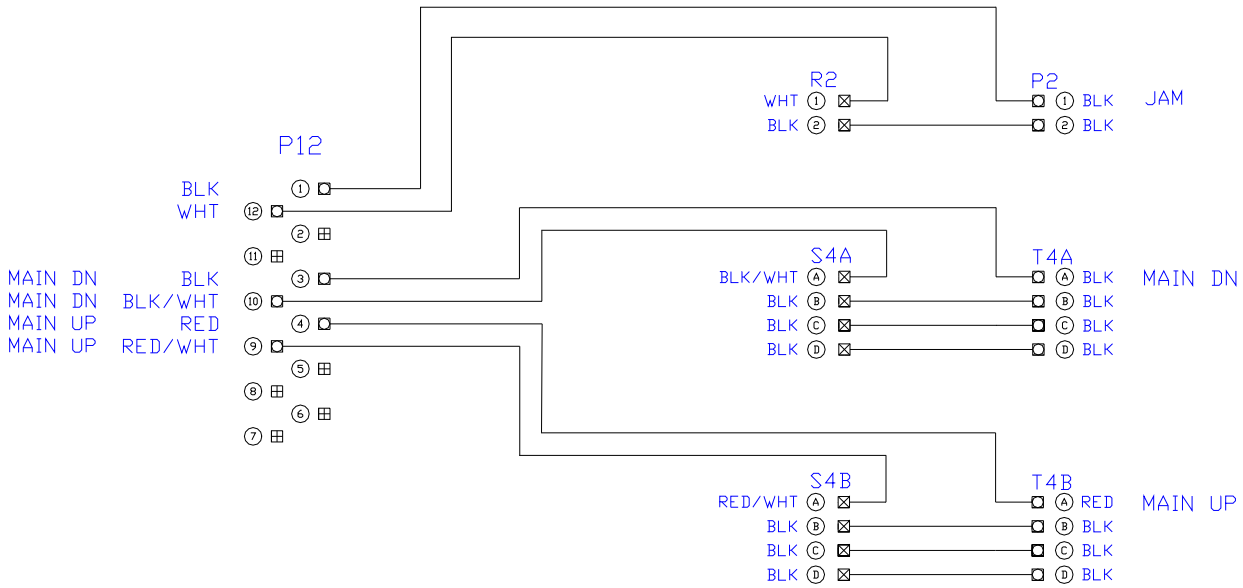

12.8 ITEM C30: 43250-07 – CABLE UC5 BATTERY JD FUSED

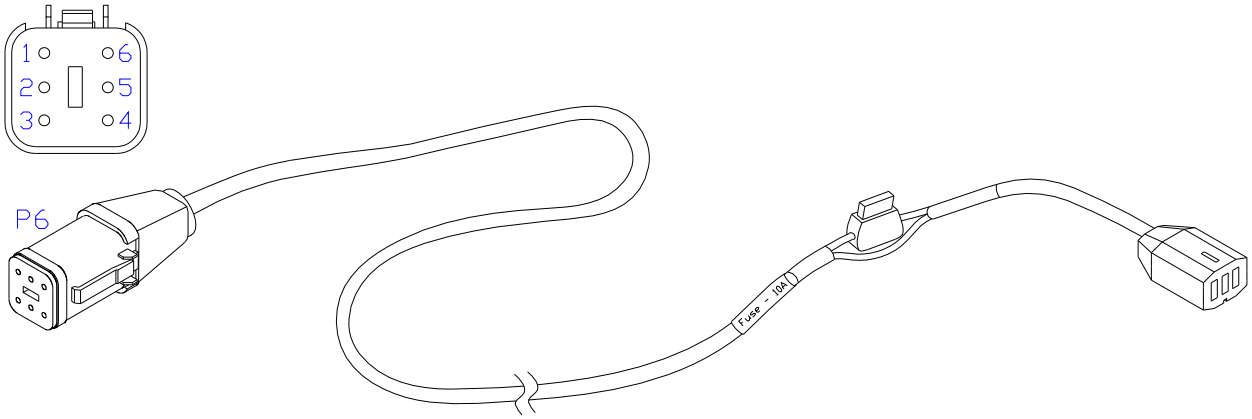

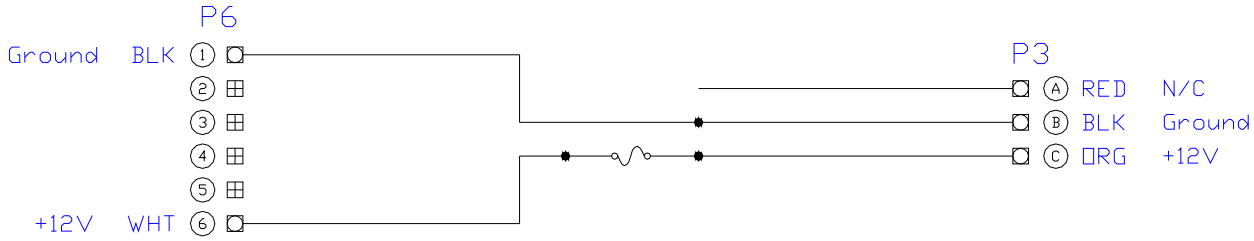

13 Appendix A: Interface Cable Modification Procedure

Some earlier models of John Deere sprayers (4700 and 4710) may use a different style of boom valve block with a different arrangement of the connectors. As a result, the NORAC 44658-01 interface cable (C12) will need to be modified according to the following instructions (See **Figure 33** and **Figure 34** for before and after schematics):

1. Using the supplied GP Weatherpack pin tool, locate and remove the black and black/white wires (Main Down) from the A-positions of the 4-pin flat connector tee (S4A & T4A) on the 43240-05 cable.

2. Locate and remove the red and brown wires (Left Down) from the A-position of the 6-pin flat connector tee (S6A & T6A) on the 43250-06 cable.

3. Insert the black wire from step 1 into the A-position of the 6-pin flat tower (T6A). Insert the black/white wire from step 1 into the A-position of the 6-pin flat shroud (S6A).

4. Locate and remove the red and red/white wires (Main Up) from the A-positions of the 4-pin square connector tee (S4B & T4B) on the 43240-05 cable.

5. Locate and remove the purple and orange wires (Left Up) from the A-position of the 6-pin flat connector tee (S6B & T6B) on the 43250-06 cable.

6. Insert the red wire from step 4 into the A-position of the 6-pin flat tower (T6B). Insert the red/white wire from step 4 into the A-position of the 6-pin flat shroud (S6B).

7. Remove the black wire that goes across the connection in the A-position of the 4-pin square tee with the yellow and black wires (Right Up) in the C-position (S4A & T4A) on cable 43240-06. Insert the purple wire (Left Up) from step 5 into the A-position of the 4-pin shroud (S4A). Insert the orange wire (Left Up) from step 5 into the A-position of the 4-pin tower (T4A).

8. Remove the black wire that goes across the connection in the A-position of the 4-pin flat tee with the green and blue wires (Right Down) in the C-position (S4B & T4B). Insert the red wire (Left Down) from step 2 into the A-position of the 4-pin shroud (S4B). Insert the brown wire (Left Down) from step 2 into the A-position of the 4-pin tower (T4B).

9. The cable modifications are complete. There should be 2 black wires, an incomplete 4-pin square tee and an incomplete 4-pin flat tee left over.

10. Connect the modified harness to the sprayer as indicated in **Figure 35**.

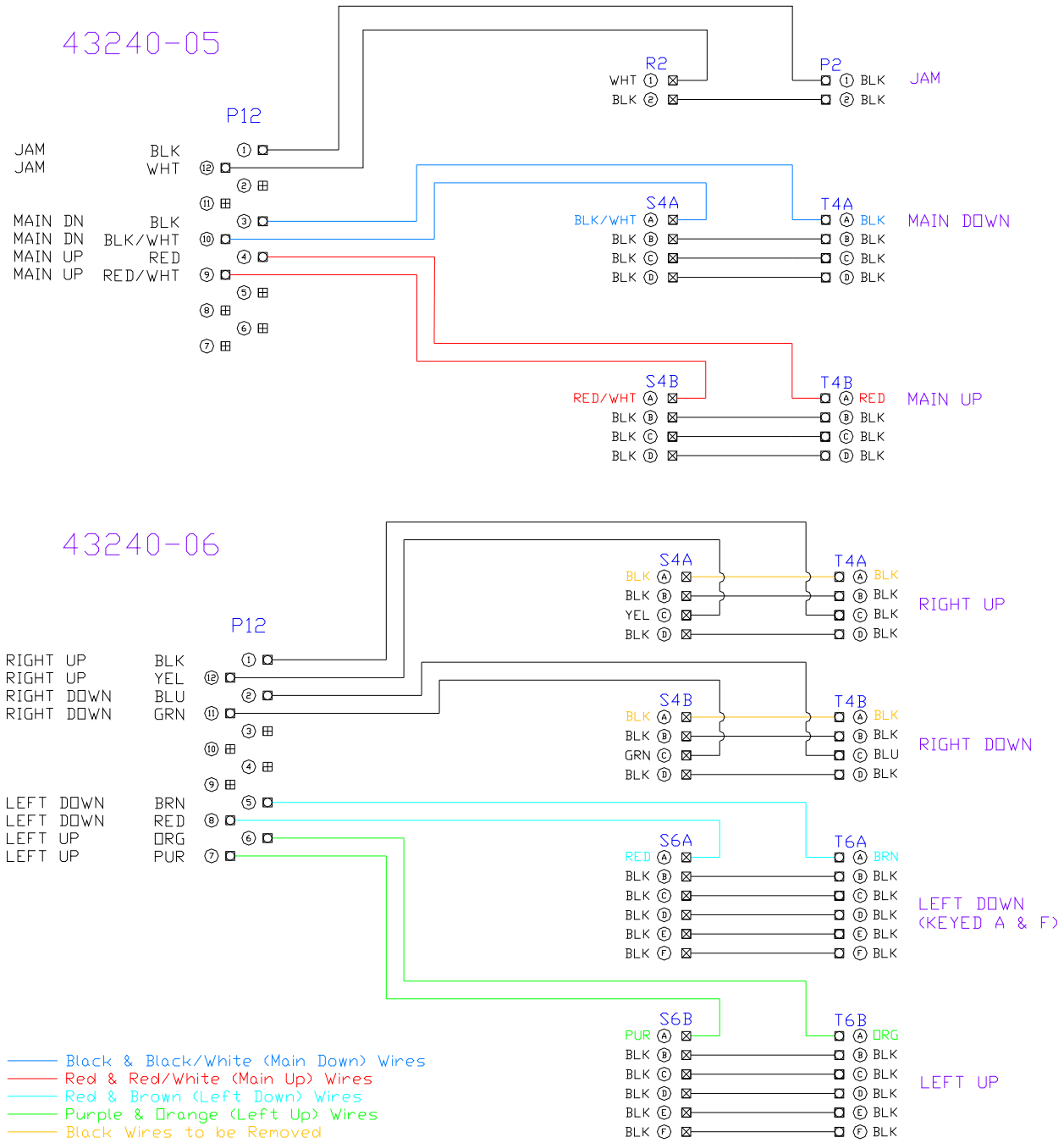

Figure 33: Cables C20 (43240-06) and C21 (43240-05) BEFORE Modification

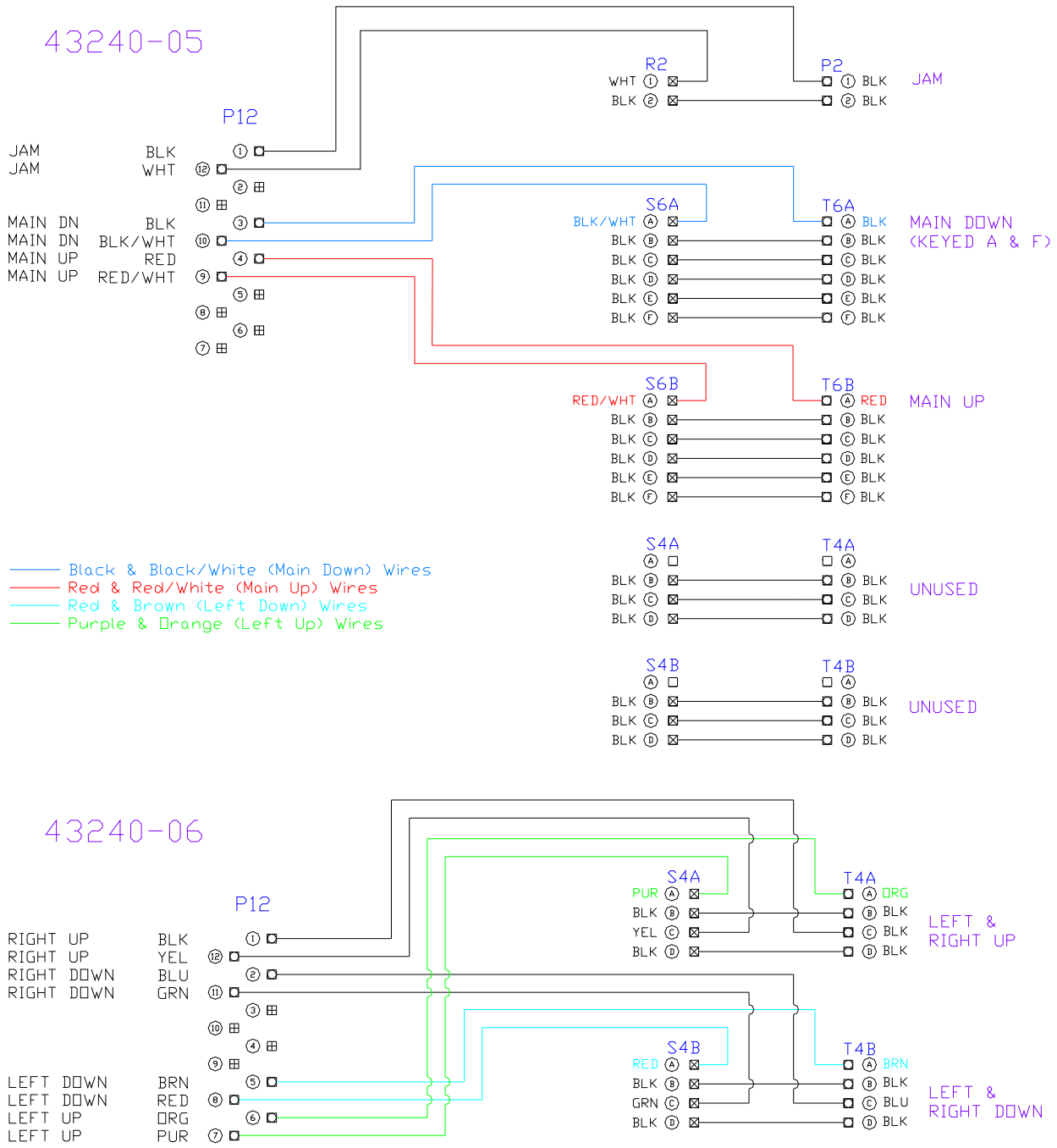

Figure 34: Cables C20 (43240-06) and C21 (43240-05) AFTER Modification

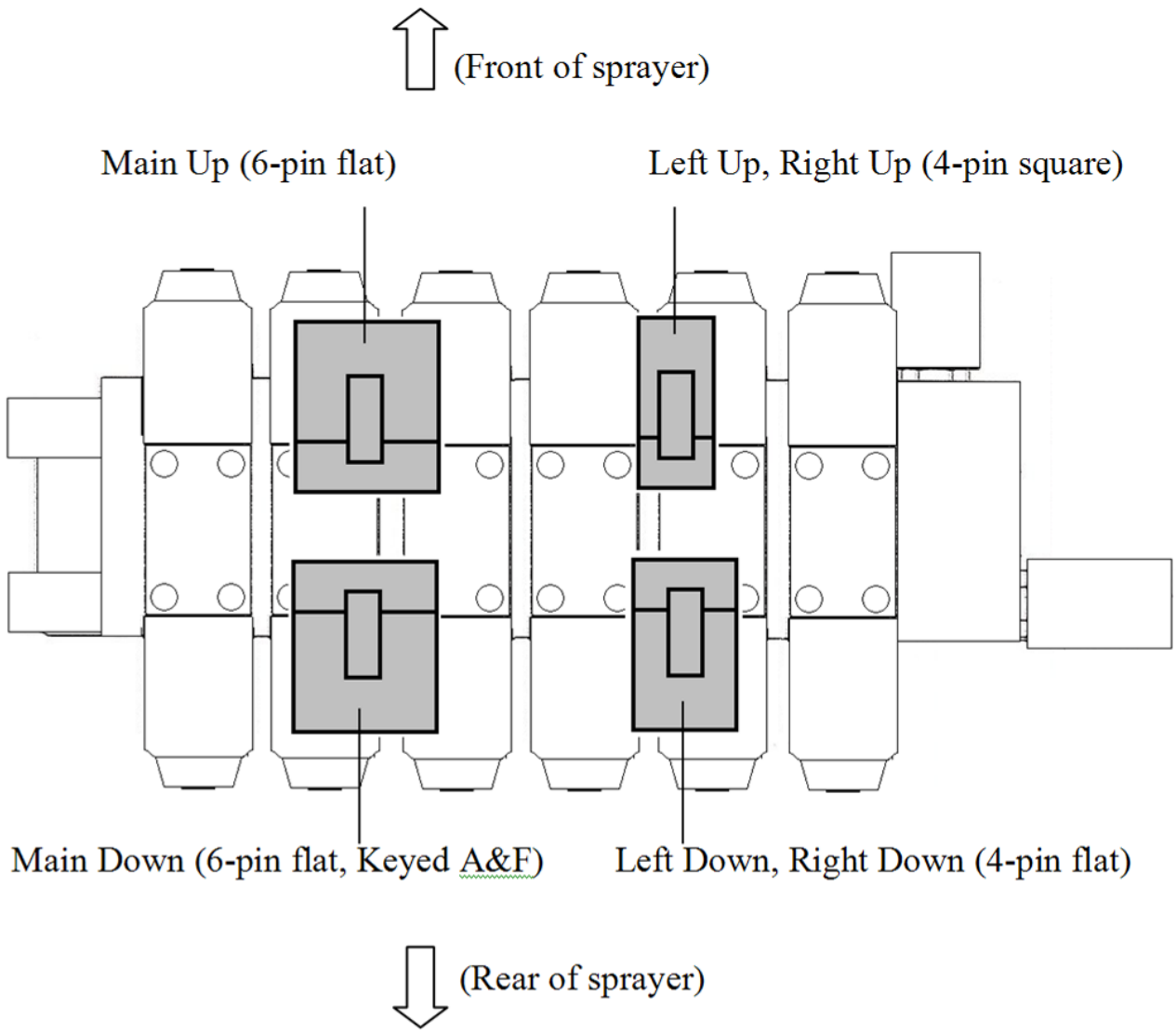

Figure 35: Early-Model John Deere Boom Valve Block (top view) with Connectors Labelled. (Valve may be different than illustrated.)

TOPCON Agriculture Canada
3702 Kinnear Place
Saskatoon, SK S7P 0A6

TOPCON Agriculture Americas
W5527 Hwy 106
Fort Atkinson, WI 53538

TOPCON Precision Agriculture Europe
Avenida de la industria,
35, Tres Cantos, España
Spain

Support
Phone: 888 979 9509
E-mail: tasupportn@topcon.com
Web: www.norac.ca