NORAC®

UC5™ CAN BUS Spray Height Control System

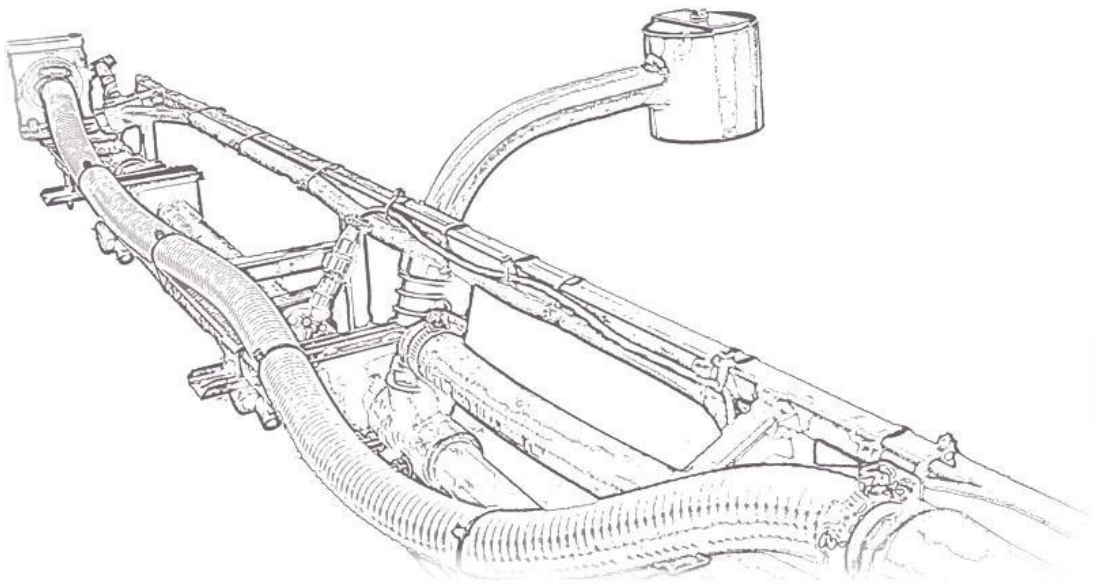

Hagie (2100/2101/284/DTS) Installation Manual

HG02

Printed in Canada
Copyright © 2008 by NORAC Systems International Inc.
Reorder P/N: UC5-BC-HG02-INST Rev J (Hagie 2100/2101/284/dts)

NOTICE: NORAC Systems International Inc. reserves the right to improve products and their specifications without notice and without the requirement to update products sold previously. Every effort has been made to ensure the accuracy of the information contained in this manual. The technical information in this manual was reviewed at the time of approval for publication.

Contents

1 Introduction 1
2 Technical Specifications 2
3 General UC5 System Layout 3
4 Kit Parts 4
5 Pre-Install Checklist 9
6 Ultrasonic Sensor Installation 10
7 Roll Sensor Installation 15
8 Hydraulic Installation 19
9 Module Installation 22
10 Connecting the Sensors to the CANbus 26
11 Software Setup 27
12 Cable Drawings 28

1 Introduction

Congratulations on your purchase of the NORAC UC5 Spray Height Control System. This system is manufactured with top quality components and is engineered using the latest technology to provide operating reliability unmatched for years to come.

When properly used the system can provide protection from sprayer boom damage, improve sprayer efficiency, and ensure chemicals are applied correctly.

Please take the time to read this manual completely before attempting to install the system. A thorough understanding of this manual will ensure that you receive the maximum benefit from the system.

Your input can help make us better! If you find issues or have suggestions regarding the parts list or the installation procedure, please don't hesitate to contact us.

⚠ Important

Every effort has been made to ensure the accuracy of the information contained in this manual. All parts supplied are selected to specially fit the sprayer to facilitate a complete installation. However, NORAC cannot guarantee all parts fit as intended due to the variations of the sprayer by the manufacturer.

Please read this manual in its entirety before attempting installation.

2 Technical Specifications

CAN ICES-3(A)/NMB-3(A)

This device complies with part 15 of the FCC Rules. Operation is subject to the following two conditions: (1) This device may not cause harmful interference, and (2) this device must accept any interference received, including interference that may cause undesired operation.

This equipment has been tested and found to comply with the limits for a Class A digital device, pursuant to part 15 of the FCC Rules. These limits are designed to provide reasonable protection against harmful interference when the equipment is operated in a commercial environment. This equipment generates, uses, and can radiate radio frequency energy and, if not installed and used in accordance with the instruction manual, may cause harmful interference to radio communications. Operation of this equipment in a residential area is likely to cause harmful interference in which case the user will be required to correct the interference at their own expense.

This Class A digital apparatus complies with Canadian ICES-003.

Pursuant to EMC Directive – Article 9, this product is not intended for residential use.

Table 1: System Specifications

Supply Voltage (rated)	12VDC
Supply Current (rated)	5A
Hydraulic Pressure (maximum)	3300 psi
Baud Rate	250 kbps
Clock Frequency (maximum)	96 MHz
Solenoid Valve PWM Frequency	300 Hz
Ultrasonic Sensor Transmit Frequency	50 kHz
Operating Temperature Range	0°C to 80°C

3 General UC5 System Layout

Figure 1 illustrates the general layout of the UC5 system components:

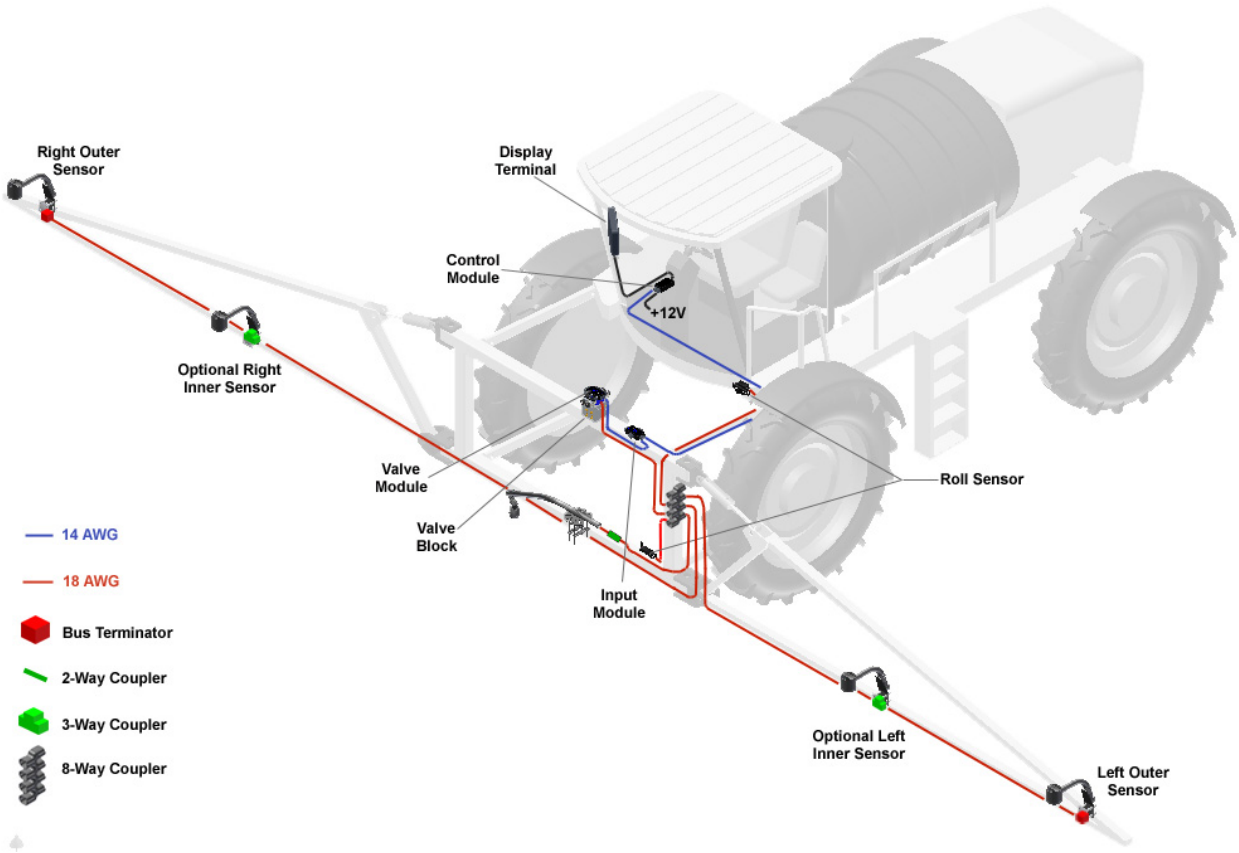

Figure 1: General UC5 System Layout

4 Kit Parts

4.1 Kit Overview

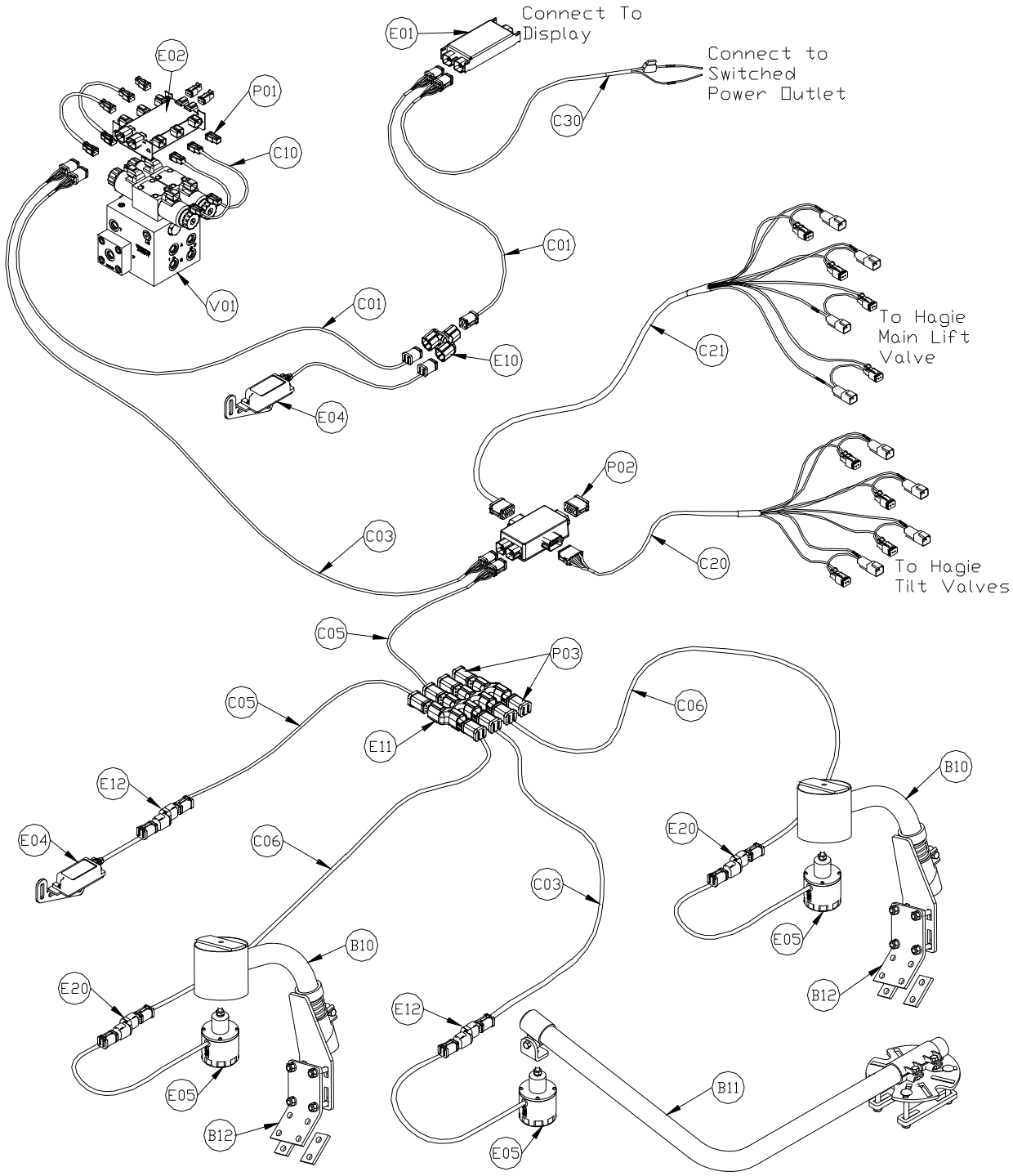

Figure 2: HG02 System Parts

4.2 Hydraulic Plumbing

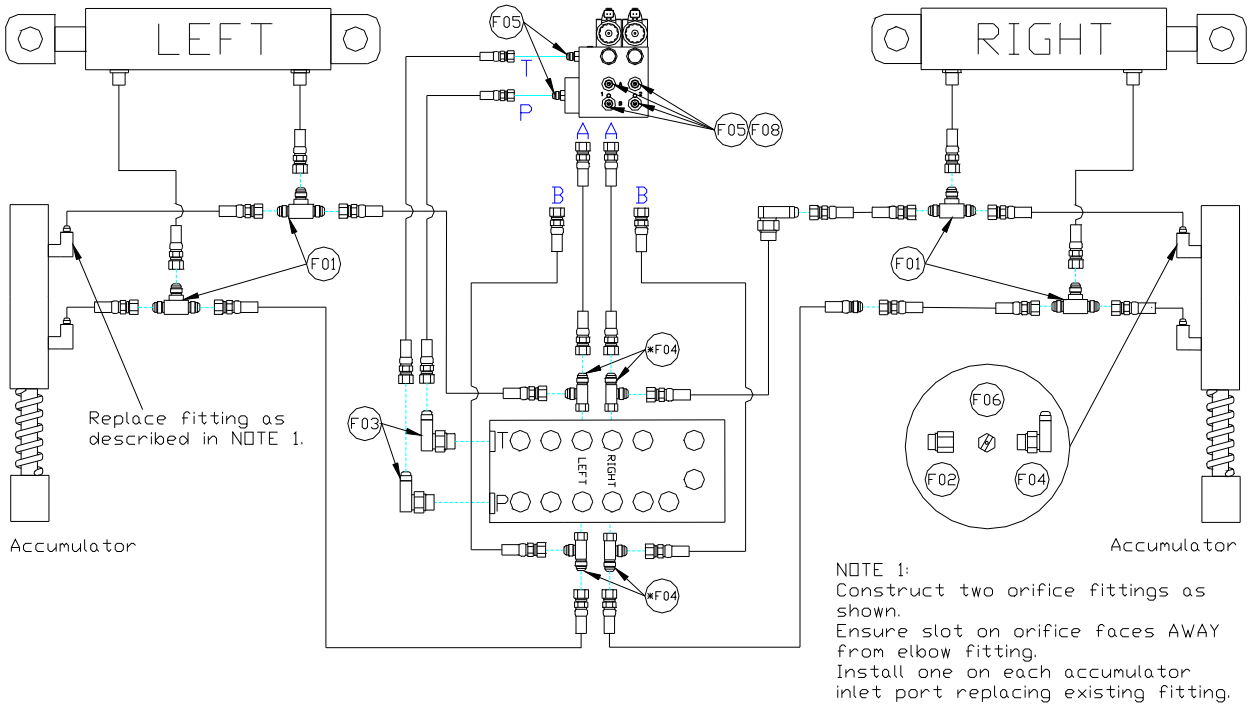

Fittings with a * are from fittings kit 44865-24

Figure 3: HG02 Hydraulic Plumbing Parts

4.3 List of Parts

Item	Part Number	Name	Quantity
B10	44728	MOUNTING BRACKET COMPLETE UC4 BREAKAWAY EXTENDED	2
B11	44743	MOUNTING BRACKET MAIN LIFT SENSOR UC4 PLUS	1
B12	44695-11	MOUNTING BRACKET BREAKAWAY ADAPTER UC3 SENSOR NITRO/HAGIE	2
C01	43220-05	CABLE UC5 NETWORK 14 AWG 5M	2
C03	43220-03	CABLE UC5 NETWORK 14 AWG 3M	2
C05	43220-01	CABLE UC5 NETWORK 14 AWG 1M	2
C06	43210-20	CABLE UC5 NETWORK 18 AWG 20M	2
C10	43230-04	CABLE UC5 VALVE 2PIN DT TO 2PIN DT	4
C20	43240-01	CABLE UC5 INTERFACE TILT DT	1
C21	43240-07	CABLE UC5 INTERFACE MAIN DT (WITH AUX 1 & 2)	1
C30	43250-06	CABLE UC5 BATTERY PIGTAIL FUSED - 5A	1
E01	43710	UC5 CONTROLLER MODULE	2
E02	43720	UC5 VALVE MODULE	1
E03	43732	UC5 INPUT MODULE PASS THRU	1
E04	43741	UC5 ROLL SENSOR VER. 2	2
E05	43750	UC5 ULTRASONIC SENSOR	3
E10	43760	UC5 NETWORK COUPLER 3-WAY	1
E11	43765	UC5 NETWORK COUPLER 8-WAY	1
E12	43764	UC5 NETWORK COUPLER 2-WAY	1
E20	43764T	UC5 NETWORK COUPLER 2-WAY TERMINATOR	2
H10	44865-13	HYDRAULICS FITTING KIT - HG1	1
H11	44865-24	HYDRAULICS FITTING KIT - RB1	1
M02	UC5-BC-HG02-INST	MANUAL INSTALLATION UC5 HAGIE 2100/2101/284/dts	1
M06	45015	ANTI-SEIZE LUBRICANT KIT	1
P01	106034	UC5 NETWORK 2 PIN PLUG	4
P02	106602	UC5 NETWORK 12 PIN PLUG (A-KEY)	1
P03	105882	UC5 NETWORK 6 PIN PLUG	3
V01	44963D	VALVE BLOCK ASSEMBLY 2 STATION CC/LS PROP DT 4 BOLT	1

4.4 Hydraulic Fitting Kit Details (P/N: 44865-14)

Item	Part Number	Name	Quantity	Picture
F01	103195	6MJT	2	
F02	104584	MALE TO FEMALE ADAPTER - 6MB 6FB	2	
F03	103071	MALE 90 DEGREE ADAPTER - 8MB 6MJ90	2	
F04	103814	MALE 90 DEGREE ADAPTER - 6MB 6MJ90	2	
F05	103312	MALE ADAPTER - 6MB-6MJ	6	
F06	44927	ORIFICE INSERT .031 IN ONE WAY	2	
F08	44928	ORIFICE INSERT .047 IN ONE WAY	4	
F09	104369	PLUG - 6MBP	4	
F10	103839	TEE ADAPTER - 6FJXR 6MJT	2	

Fitting F09 is not used in this installation.

4.5 Hydraulic Fitting Kit Details (P/N: 44865-24)

Item	Part Number	Name	Quantity	Picture
*F01	44928	ORIFICE INSERT .047 IN ONE WAY	2	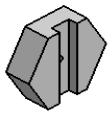
*F02	103312	MALE ADAPTER - 6MB 6MJ	4	
*F03	104369	PLUG - 6MBP	2	
*F04	103839	TEE ADAPTER - 6FJXR 6MJT	4	

Fitting F01, F02 and F03 are not used in this installation.

Fitting Name Example:

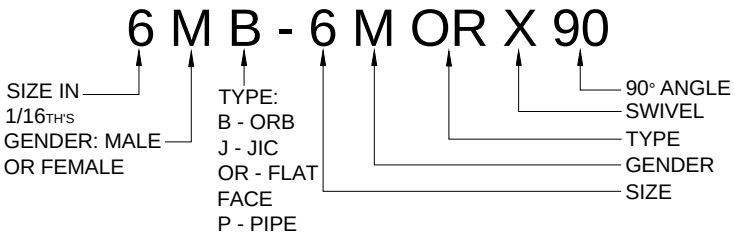

⚠ Important

The use of dielectric grease is not recommended on any NORAC electrical connections.

⚠ Important

To ensure all stainless steel hardware does not gall or seize apply a light coating of the supplied Permatex Anti-seize grease (M06) to all threaded parts upon installation. Permatex Anti-seize lubricant is preferred, but other similar anti-seize products may be used.

5 Pre-Install Checklist

The pre-install checklist is necessary to check the existing sprayer functionality before the installation**.**

1. Unfold the sprayer over a flat, unobstructed area (i.e. no power lines…etc.).
2. Ensure all boom-fold operations are functional (place a check mark in boxes below).
3. Bring engine to field-operational RPM and record below.
4. Record the time (seconds) it takes for a full stroke for all boom functions. To ensure repeatable measurements, take the average of 3 trials.
5. Not all sprayers will have the functions listed below in **Figure 4**.

⚠ Important

Ensure the boom has sufficient travel so it does not contact the ground during these tests.

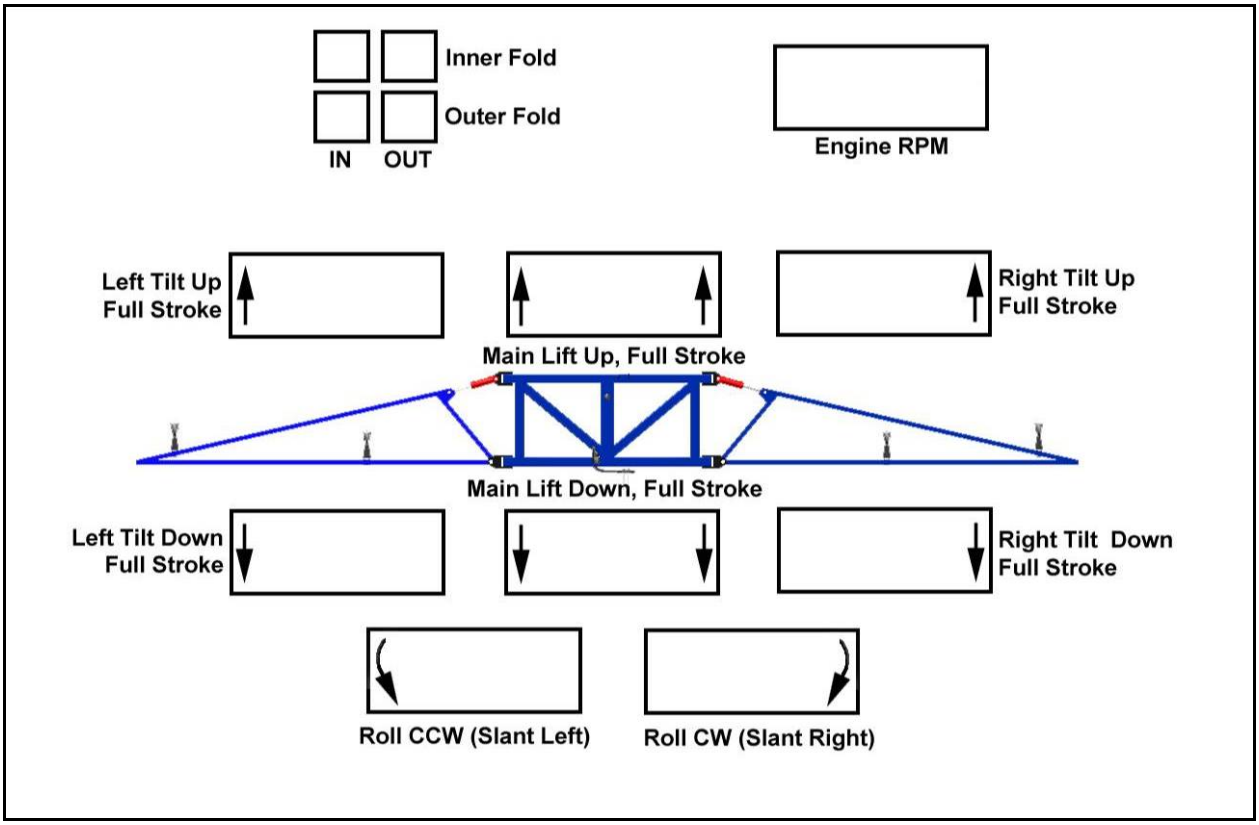

Figure 4: Pre-Install Boom Speeds

6 Ultrasonic Sensor Installation

6.1 Bracket Assembly

Assemble the breakaway sensor bracket as illustrated in **Figure 5**, following the instructions below.

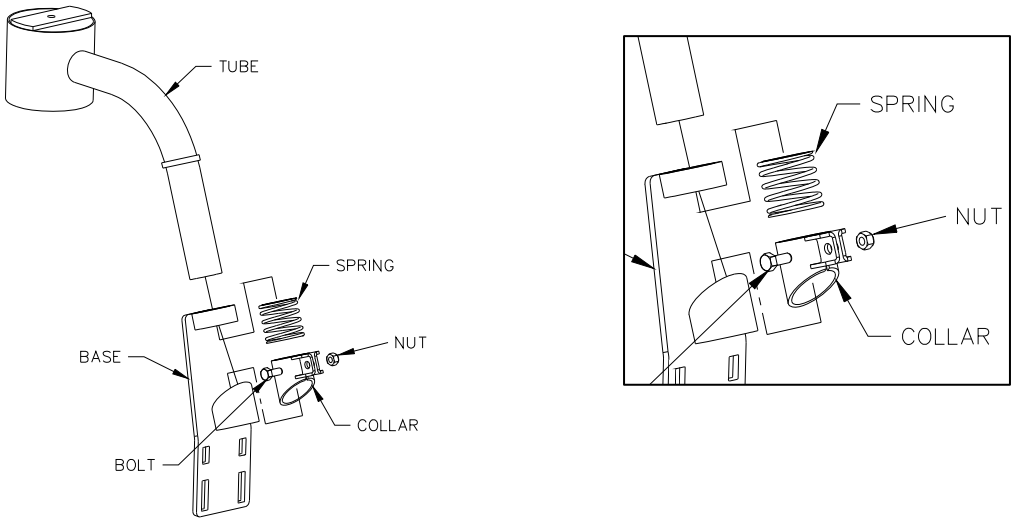

Figure 5: Breakaway Bracket Assembly

1. Compress the spring and insert it together with the collar into the base.
2. Slide the tube through the assembled part.
3. Using the bolt and nut, tighten the collar to the tube with the sensor tube centered.
4. Apply a small amount of grease to the rotating surfaces of the bracket.
5. To install the sensor brackets on the 45 degree tube, use the sensor adapter plate B12.

6.2 Ultrasonic Sensor Serial Number Arrangement

When installing the UC5 sensors, start with the smallest serial number on the left-hand side, and proceed to the largest serial number on the right hand side. Each UC5 sensor has a serial number stamped on the sensor housing.

Apply a light coating of the supplied Permatex Anti-seize grease (M06) to all threaded parts upon installation.

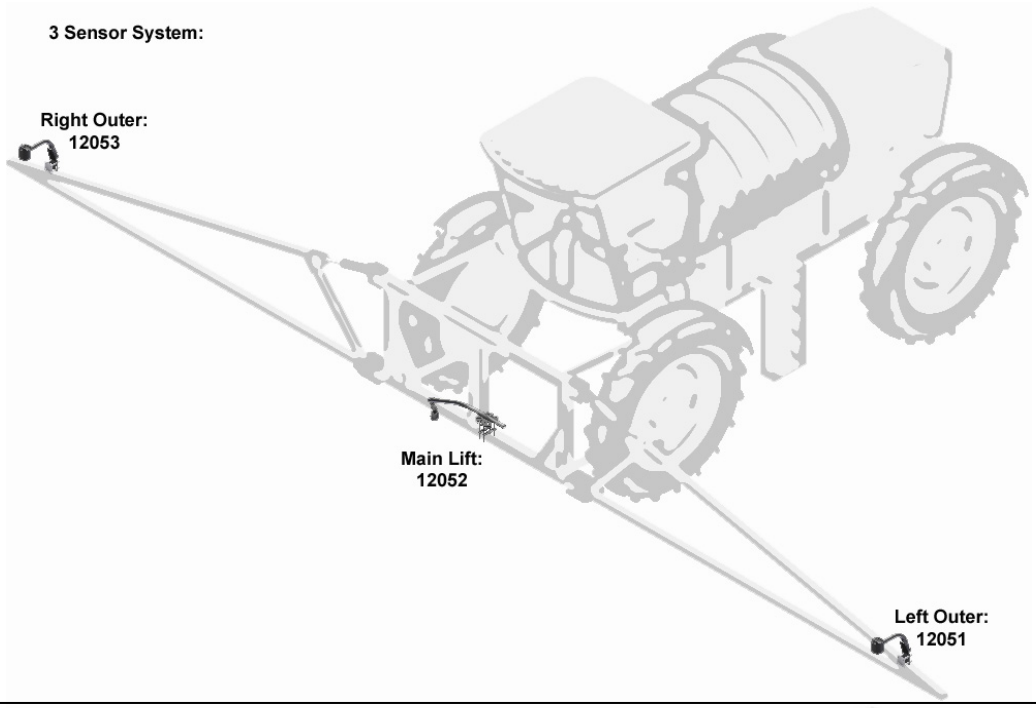

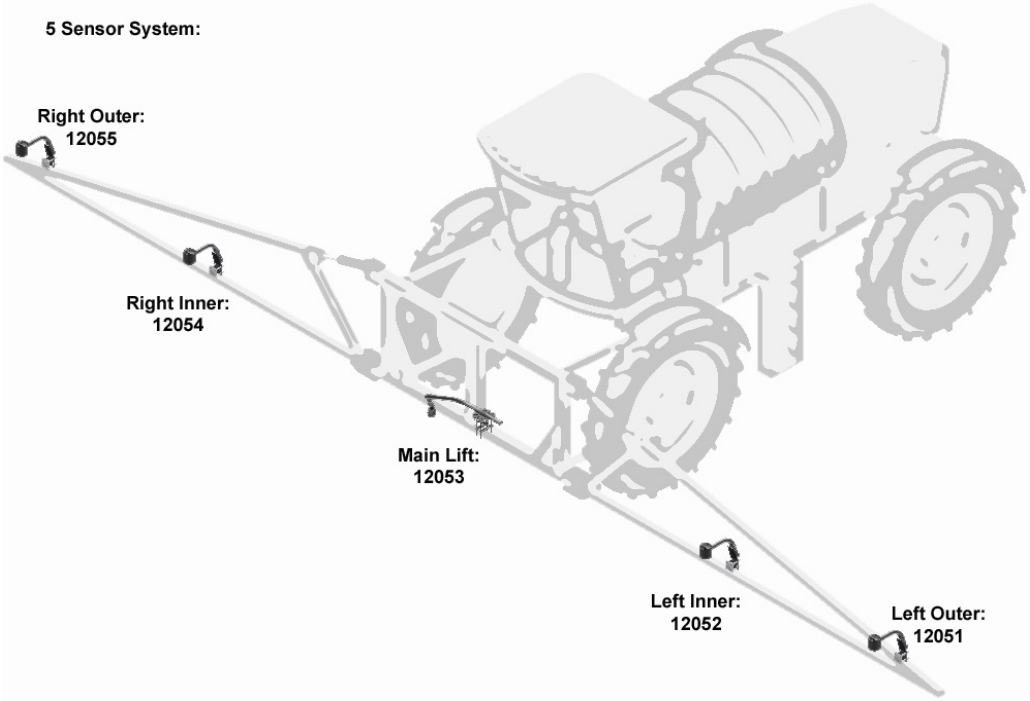

Figure 6: Sensor Serial Number Arrangement

6.3 Ultrasonic Sensor Mounting Guidelines

The following guidelines will ensure optimal sensor performance and prevent sensor measurement error. These rules should be followed for both the wing sensors and the main lift (middle) sensor.

1. In its lowest position, the sensor must be 9 inches (23 cm) or more from the ground **(A)**.

2. The centerline of the acoustic cone should be approximately vertical at normal operating heights **(A)**.

3. The bottom of the sensor must be at least 9 inches in front of the spray nozzles and boom structure **(B)**. (This does not apply for the main lift sensor)

4. The bottom of the sensor must be at least 9 inches above the spray nozzles **(C)**.

5. Ensure there are no other obstructions with a 12 inch (23 cm) diameter circle projected directly below the sensor **(D)**.

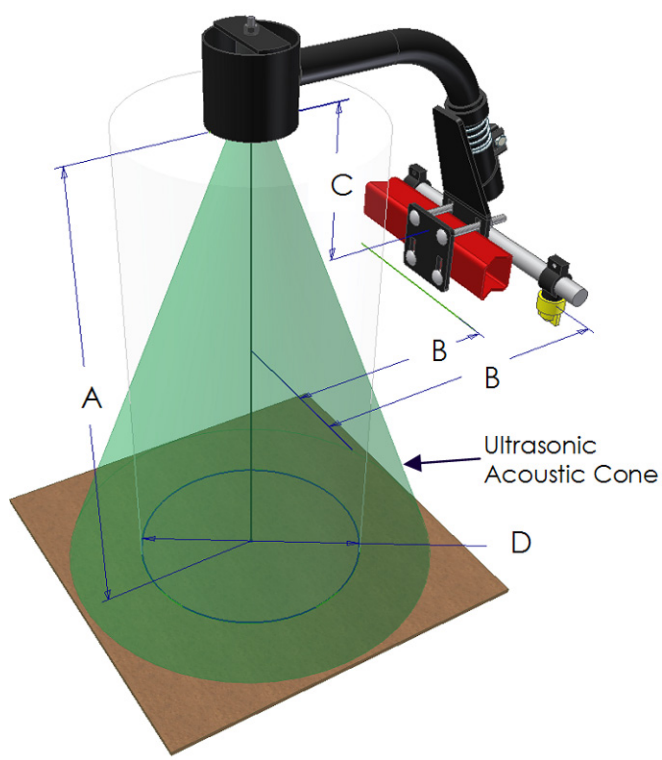

Figure 7: Sensor Mounting Guidelines

6.4 Wing Sensor Installation

1. The sensor bracket should be oriented forward (ahead of the boom).

2. Typically the best mounting location for the wing sensor brackets will be near the end of the boom tips, approximately two feet (60cm) from the end.

3. Depending on the boom design, some breakaway sections will lift upwards as they break back. If the sensor is mounted to this portion of the boom, the system will force the boom downwards towards the ground as the boom folds backwards.

4. Mount the NORAC UC5 ultrasonic sensor into the sensor bracket and run the sensor cable through the sensor tube.

⚠ Important

A problem can arise if a sensor is not mounted correctly. It is possible for the sensor to read off of the boom instead of the ground. This may only become apparent once the control system is switched from soil to crop mode.

Also be careful that the sensor bracket does not collide with any other part of the boom when the boom is folded to transport position. If possible, mount the sensor brackets while the booms are folded to ensure they will not cause interference.

Figure 8: Sensor Reading Off Boom

6.5 Main Lift Sensor Installation

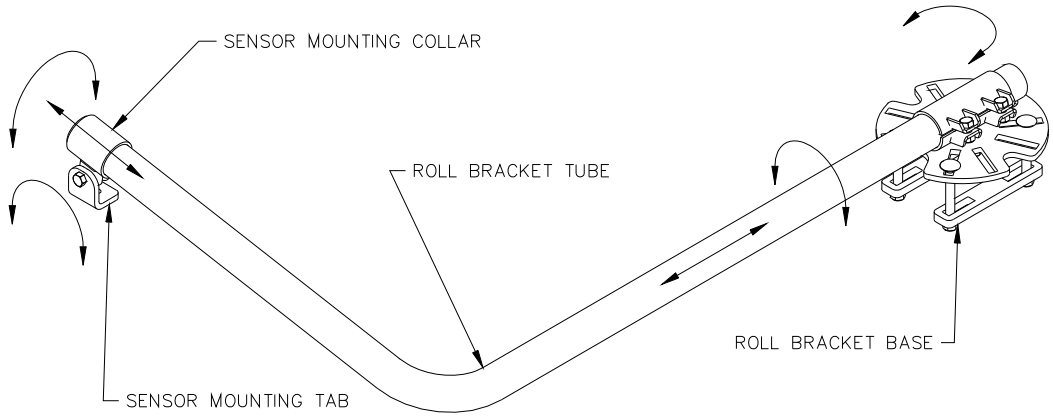

Figure 9: Main Lift Bracket Assembly

1. There are a variety of ways to mount the main lift bracket on most sprayers. The bracket should position the sensor approximately in the center of the sprayer, forward of the boom. An example of this mounting is illustrated in **Figure 10**.

2. Mount the ultrasonic sensor to the main lift bracket. Run the sensor cable down the center of the main lift bracket tube.

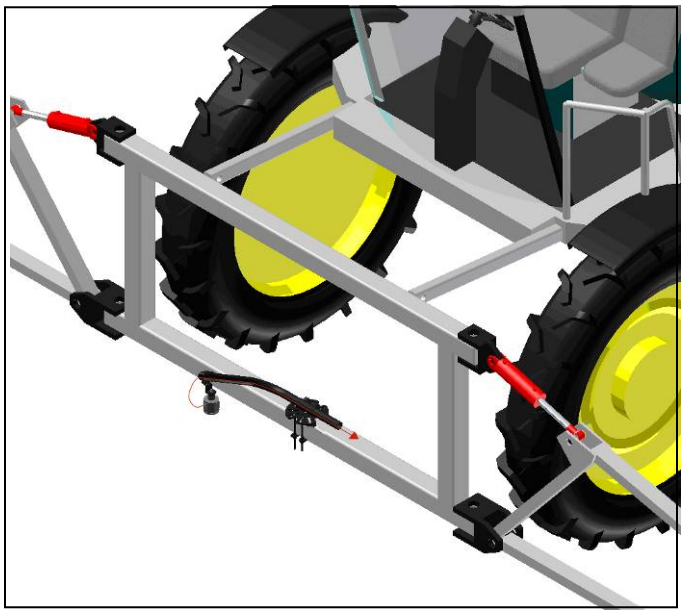

Figure 10: Example Mounting of the Main Lift Bracket

⚠ Important

Ensure the bracket does not collide with any other part of the sprayer throughout the full range of main lift motion.

7 Roll Sensor Installation

7.1 Bracket Assembly

1. Securely mount the roll sensors to the included roll sensor brackets using the #6 machine screws.

2. The orientation of both roll sensors to the roll sensor bracket will depend on the bracket mounting. The roll sensor CANbus connector must be pointing towards the right side of the sprayer when looking from the rear of the sprayer.

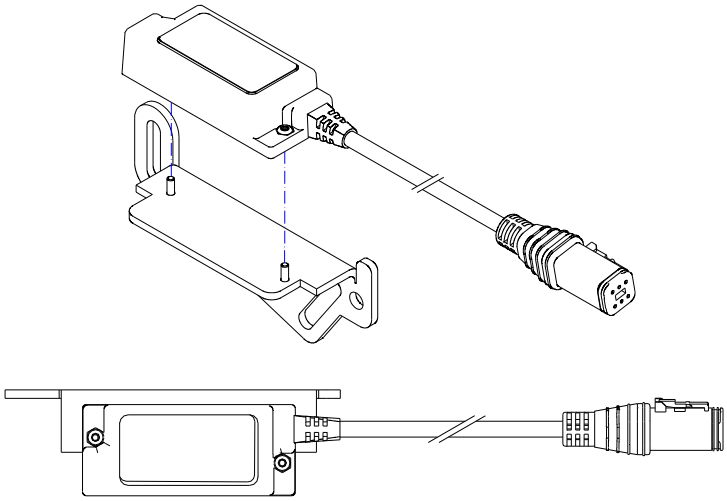

Figure 11: Mounting Roll Sensor to Bracket

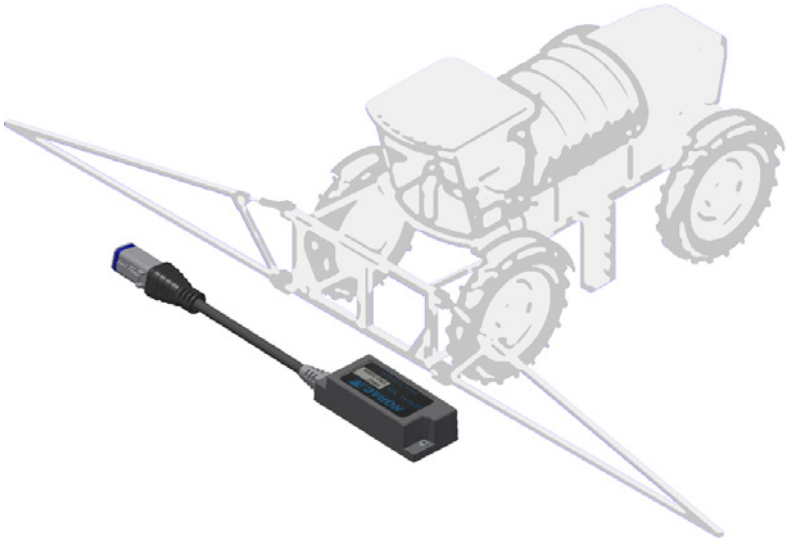

Figure 12: Roll Sensor Orientation - Connector Facing Right Wing

7.2 Roll Sensor Mounting Guidelines: Front Mounted Rigid Booms

1. When mounting the roll sensors, mount one to the boom and one to the chassis near the sprayer cab.

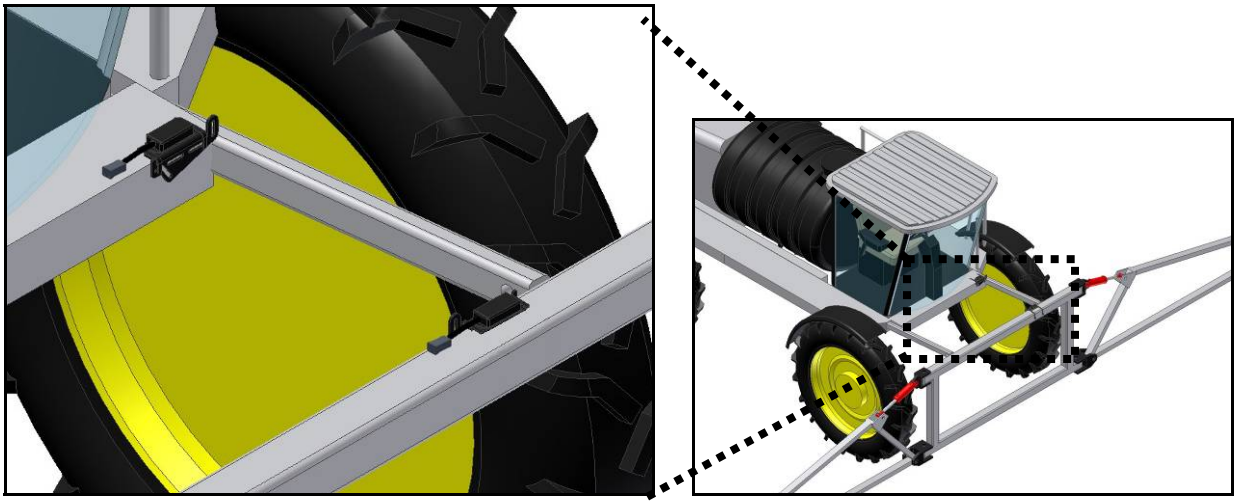

Figure 13: Roll Sensor Mounting on a Front Mounted Rigid Boom

2. Ensure the roll sensors are relatively level when the sprayer boom and chassis are level.

3. Both roll sensor cables must be pointing towards the right hand wing of the sprayer when looking from the rear of the sprayer.

4. Ensure both roll sensors are mounted adequately and that the cables provide enough slack to allow sufficient boom roll.

7.3 Boom-Frame Roll Sensor Mounting

1. Install the roll sensor with the lowest serial number onto the top part of the center boom section on the left hand side of the boom. The roll sensor must be mounted with the connector facing the right boom.

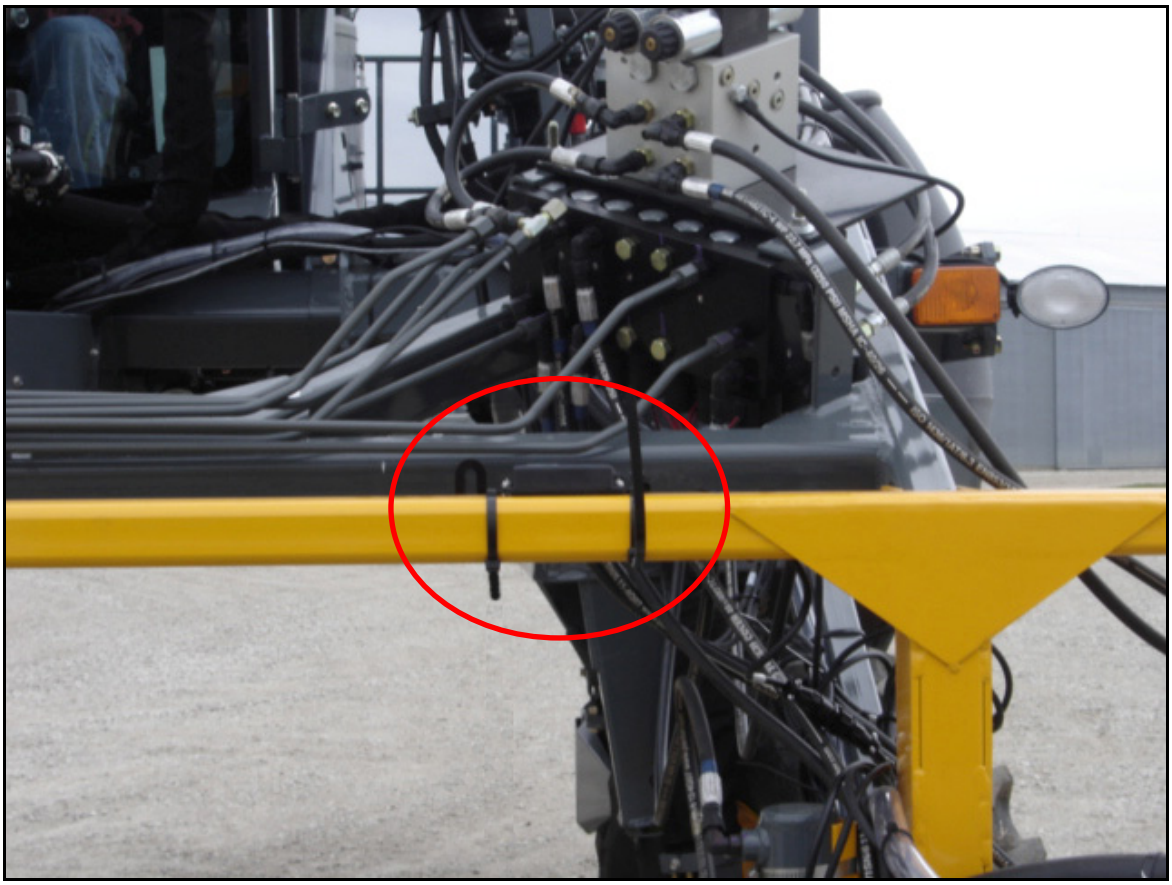

Figure 14: Hagie Boom Frame Roll Sensor Mounting

⚠ Important

Ensure the boom frame roll sensor does not collide with any parts and the cable has sufficient slack for the boom to travel though its entire range of motion.

7.4 Chassis Roll Sensor Mounting

1. Mount the chassis roll sensor on the main sprayer chassis, with the cable facing the right hand wing.

2. A common mounting location is in front of the left hand side air bag, near the location where the main lift cylinder attaches to the frame.

3. Connect a 3-way coupler (E10) onto the roll sensor cable.

4. Connect cable C01 to the 3-way coupler and route it to the front of the boom.

Figure 15: Hagie Boom Frame Roll Sensor Mounting

8 Hydraulic Installation

Warning!

Ensure all pressure has been bled from the system before disconnecting any lines or fittings. Hydraulic pressure will exist on the wing tilt circuits unless the wings are being supported by other means. The hydraulic installation may be performed with the wings in transport position, resting on the ground or with the tilt cylinders fully extended.

Important

Component failure due to oil contamination is not covered under the NORAC UC5 system warranty. It is recommended that a qualified technician perform the hydraulic installation.

8.1 Valve Assembly

1. On a clean surface remove the plastic plugs from the block.
2. Install the 6MB-6MJ (F05) fittings into the "P" and "T" ports. Tighten to 18 ft-lbs (24 Nm).
3. Insert two orifices (F08) into the "B" ports with the notch facing out.
4. Install the 6MB-6MJ (F05) fittings into the "B" ports. Tighten to 18 ft-lbs (24 Nm).
5. Insert two orifices (F08) into the "A" ports with the notch facing in.
6. Install the 6MB-6MJ (F05) fittings into the "A" ports. Tighten to 18 ft-lbs (24 Nm).

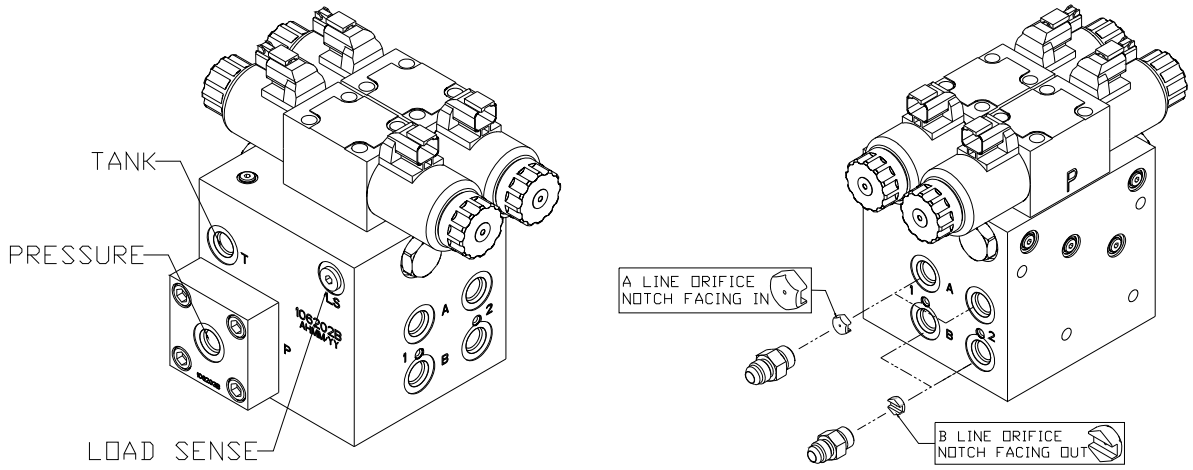

Figure 16: NORAC Valve Block Details

8.2 Valve Block Mounting

1. Install the valve block (V01) onto the plate mounted above the Hagie valve block.

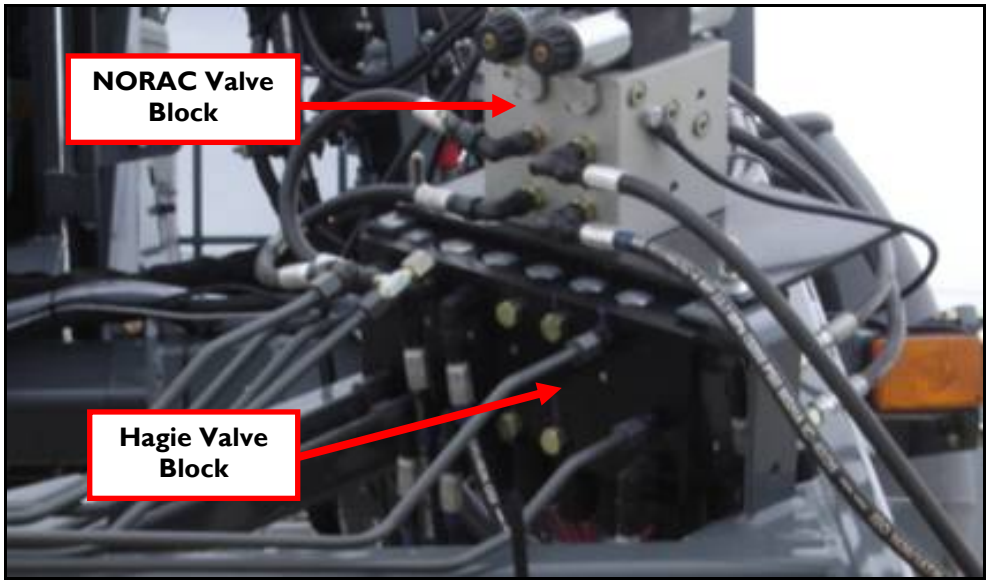

Figure 17: Valve Block Mounting

8.3 Hydraulic Plumbing

Warning!

From this point on in the installation the booms will be inoperative until the hydraulics are fully installed.

1. After the NORAC valve is mounted, the hydraulic hoses and fittings can be plumbed. The plumbing for the hydraulic circuit is shown schematically in **Figure 3**.

2. The boom raise lines must be connected to the "B" ports on the NORAC block.

3. The boom lower lines must be connected to the "A" ports.

9 Module Installation

An optional module mounting bracket kit is available for purchase from NORAC. The mounting brackets are compatible with control modules and input modules. One kit is needed per module.

Item	Part Number	Name	Quantity
B20	43708	UC5 MOUNTING BRACKET KIT (CONTROL AND INPUT MODULES)	1

9.1 Control Module

1. Refer to **Figure 2** and **Figure 18**.

2. Securely mount the control module (E01) inside the sprayer cab using screws, cable ties or optional brackets.

3. Connect the display terminal to the control module. This display cable must be connected to the end of the control module with only one Deutsch connector.

4. Connect the power cable (C30) to one of the two CANbus connectors on the control module. Connect the other end of the power cable to the terminal strip in the cab. Be sure that the power is connected to a switched power supply.

5. Route cable C01 from the other CANbus connector, through the cab knock outs and towards the front left hand wheel.

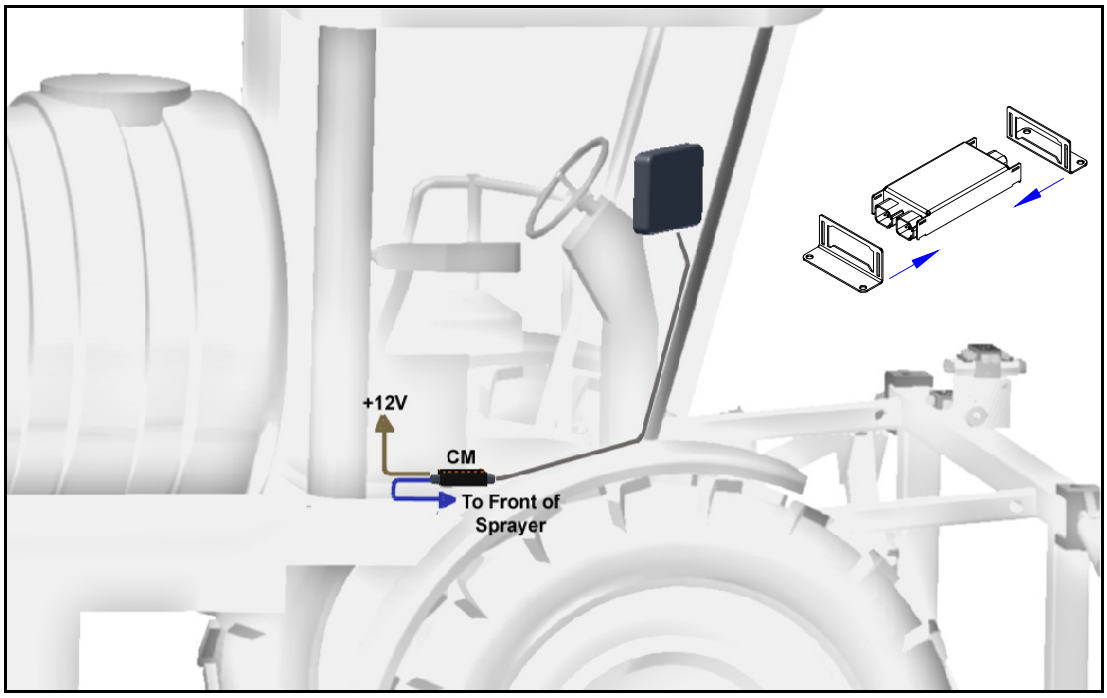

Figure 18: Control Module Mounting

9.2 Input Module

1. Install the input module (E03) on the boom near the sprayer valve block. Secure it to the boom using cable ties or optional brackets.

2. Connect the free end of the CANbus cable (C03) from the valve module to the input module.

3. Insert the 12 pin plug (P02) into the *OEM 3* connector on the end of the input module

4. Connect the 12 pin connector on the tilt interface cable (C20) to the *Thru 2* connector on the side of the input module.

5. Insert the other connectors on C20 into the tilt connectors on the sprayer valve block.

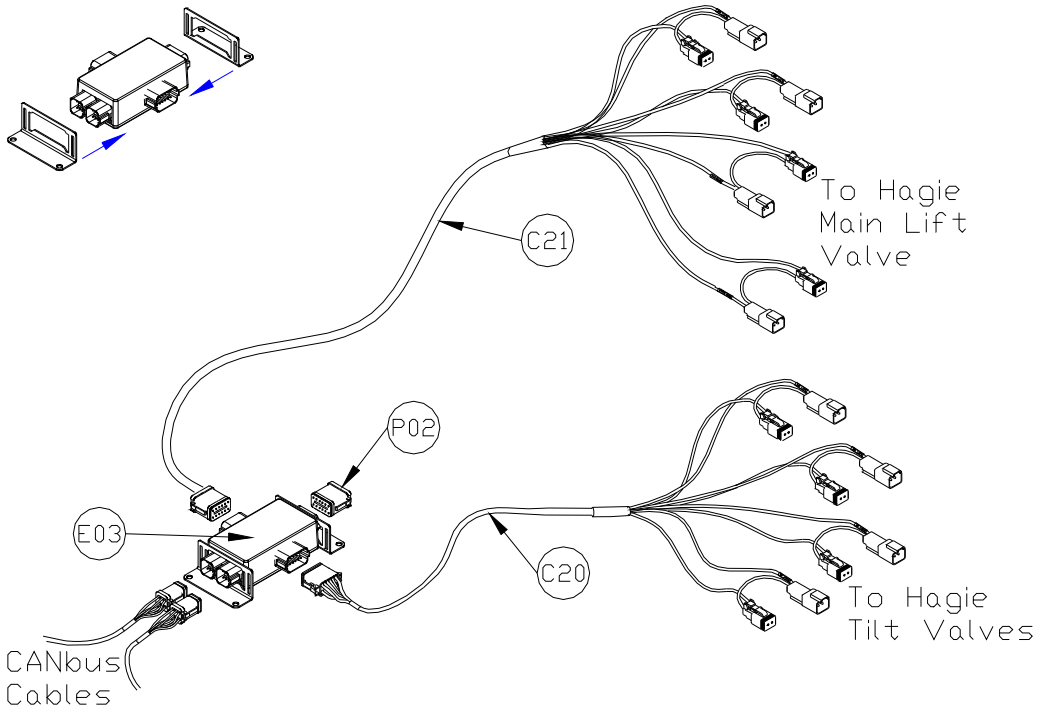

Figure 19: Input Module Connections

6. Connect the 12 pin connector on the main lift interface cable (C21) to the *Thru 1* connector on the side of the input module.

7. Insert the other connectors on C21 into the main lift connectors on the sprayer valve block.

8. Insert the connectors marked "AUX 1" into the bypass solenoid.

9. Connect cable C05 to the other CANbus connector and route the free end to the 8-way coupler (E11).

9.3 Valve Module

1. Install the valve module (E02) to the top of the NORAC valve block. Orient the 6-pin Deutsch (CANbus) connectors towards the "P" and "T" ports with the label facing up.

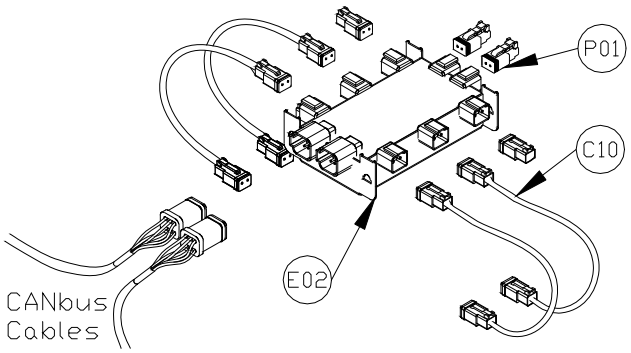

Output Number	Normal Function
1	Left Up
2	Left Down
3	Right Up
4	Right Down
5	Option 1
6	Option 2
7	Option 3
8	Option 4

Figure 20: Valve Module

2. Verify the valve coil connectors are oriented vertically (**Figure 21**).

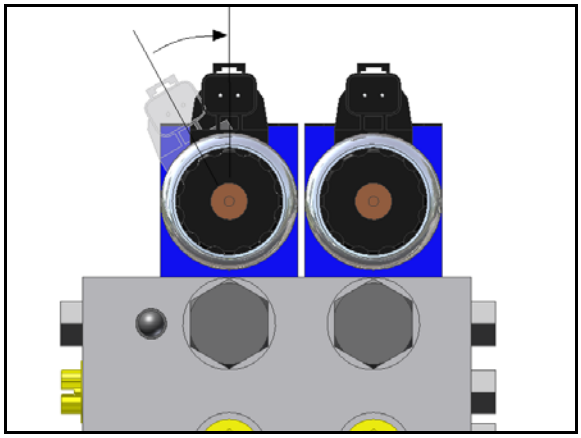

Figure 21: Align Coils

3. Place the valve module between the valve coils. Slide a valve mounting bracket over the connectors of the valve module and the valve coil connectors. This may require flexing the plastic bracket slightly (**Figure 22)**.

4. Ensure the bracket is pushed over the connectors far enough to allow the clips to engage behind the valve connectors.

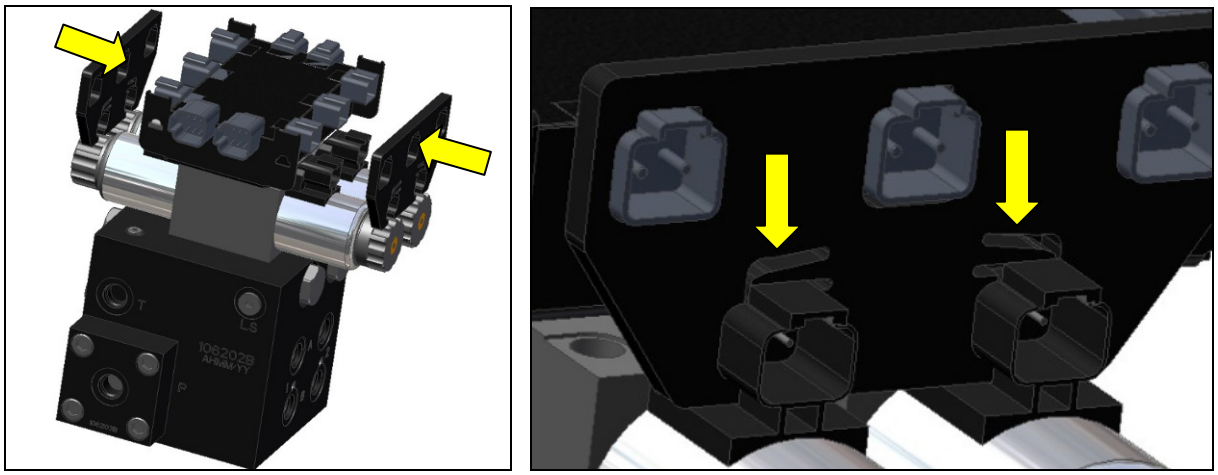

Figure 22: Valve Module Bracket Installation

5. Connect the valve module CANbus to cable C01 from the chassis roll sensor. Route cable C03 from the other CANbus connector to the input module.

6. With the valve module securely mounted to the valve block, connect the valve cables (C10), to the valve coils. Insert the 2-pin plugs (P01) into the unused 2-pin connectors on the valve module.

7. Connect the temperature probe to the valve block using the supplied 3/8" x 1/2" hex bolt.

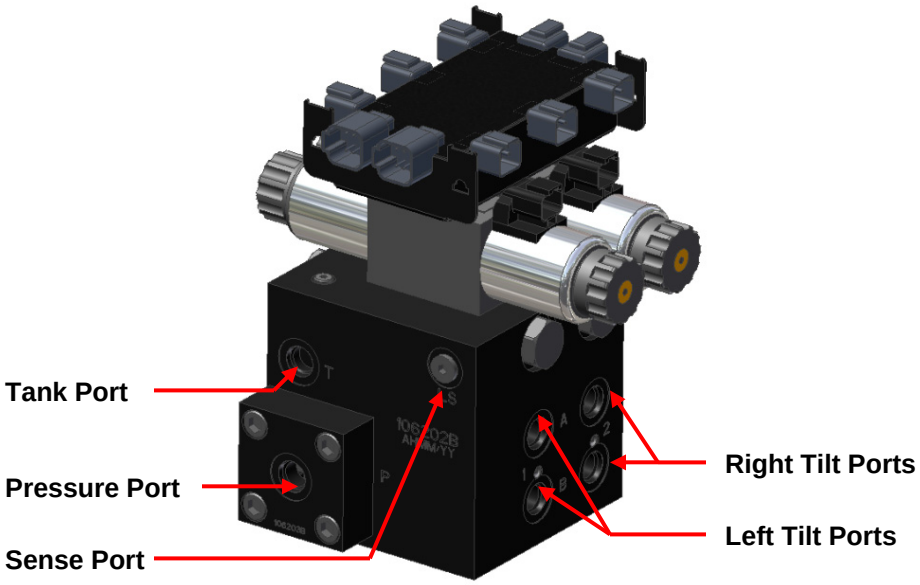

Figure 23: Valve Module - Valve Coil Connections

10 Connecting the Sensors to the CANbus

1. Fasten the 8-way coupler to the boom with cable ties.

2. Connect the boom frame roll sensor (E04) to the 8-way coupler (E11) using cable C05 and a 2-way coupler (E12).

3. Connect the main lift sensor to the 8-way coupler using cable C03 and a 2-way coupler (E12). Cable C03 and item E12 may not be needed if the 8-way coupler is mounted close enough to the main lift sensor.

4. Connect two cables (C06) to the 8-way coupler (E11) and route along the booms to the wing sensors. Follow existing cables and hoses to be sure the cable will not be pinched or stretched.

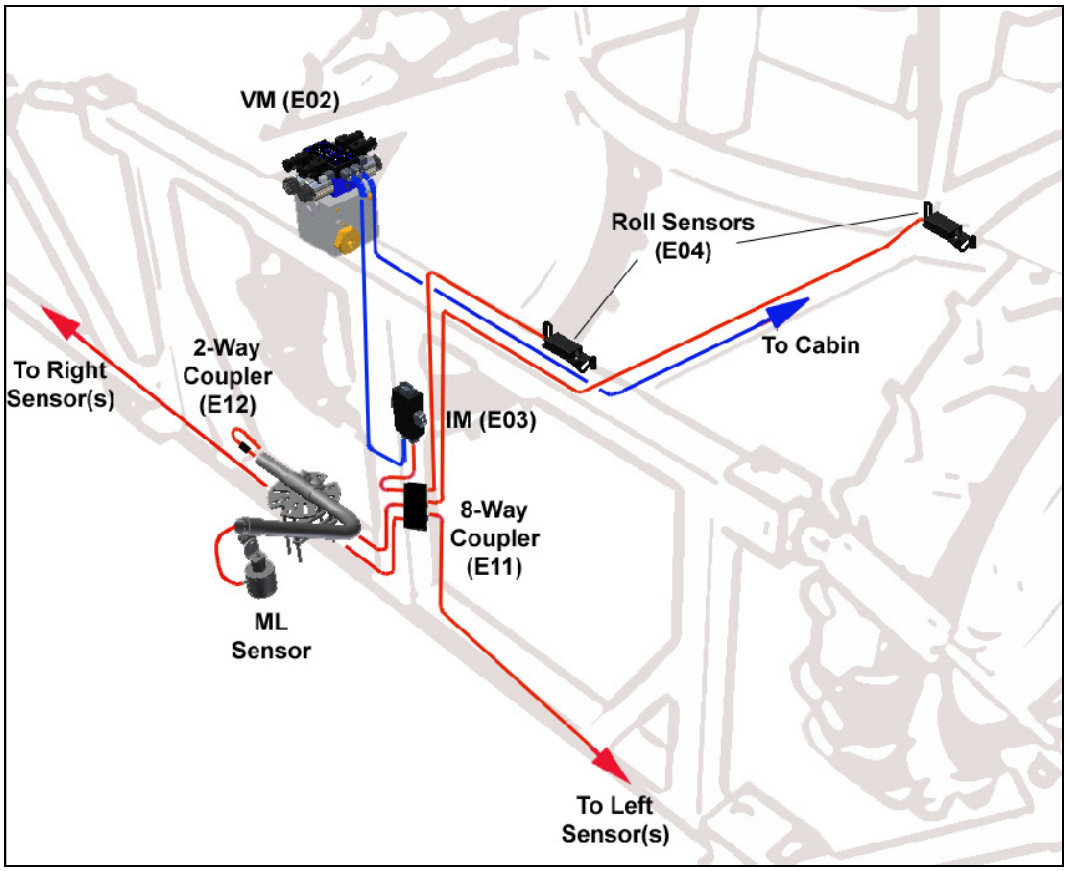

Figure 24: UC5 Module Locations and Cable Connections

5. At the sensor brackets, attach a 2-way coupler with terminator (E20) to the sprayer boom. The 2-way coupler with terminator is the white two way coupler. Plug the sensor and the CANbus cable into the 2-way coupler.

⚠ Important

Ensure that all unused connectors are plugged with the plugs provided.

11 Software Setup

1. Start up the sprayer and test the sprayer's functionality. The display terminal does not need to be powered on for the original boom function switches to operate. Unfold the booms and raise/lower each boom and the main section.

Important

Confirm that the cabling and hoses are agreeable to the entire range of motion.

2. If any functions do not work, review the hydraulic and electrical portions of this manual to check for proper installation.

3. Turn on the power for the display terminal using the switch on the side.

4. The procedure for the installation of the UC5 Spray Height Control system is now complete. Begin the AUTOMATIC SYSTEM SETUP procedure as described in the UC5 Spray Height Control Operator's Manual.

12 Cable Drawings

12.1 ITEM C01: 43220-05 - CABLE UC5 NETWORK 14 AWG 5M

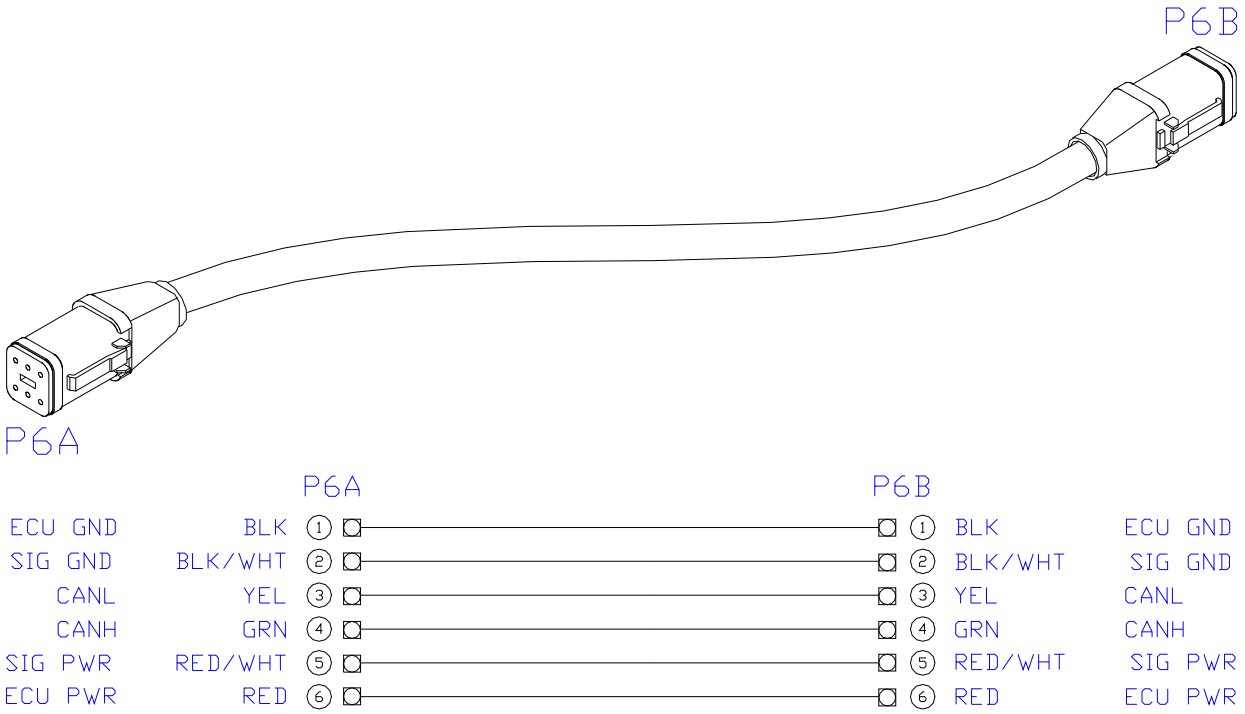

12.2 ITEM C03: 43220-03 - CABLE UC5 NETWORK 14 AWG - 3M

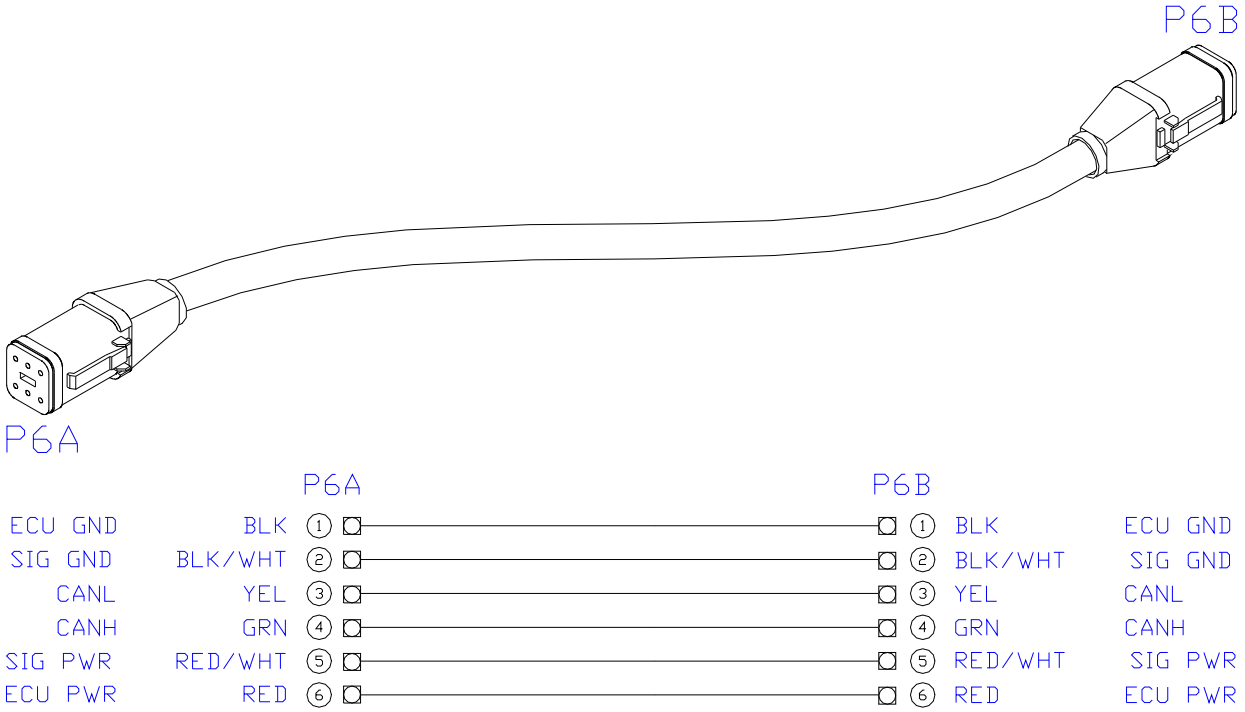

12.3 ITEM C05: 43220-01 - CABLE UC5 NETWORK 14 AWG - 1M

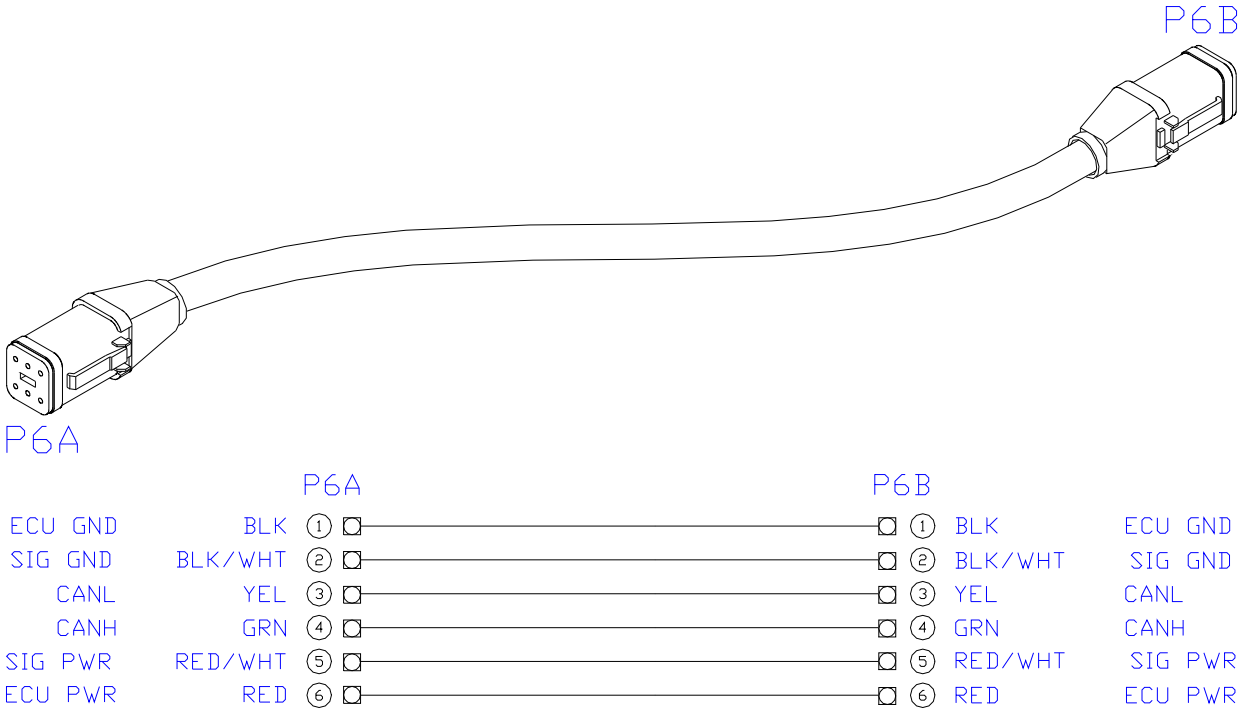

12.4 ITEM C06: 43210-20 - CABLE UC5 NETWORK 18 AWG - 20M

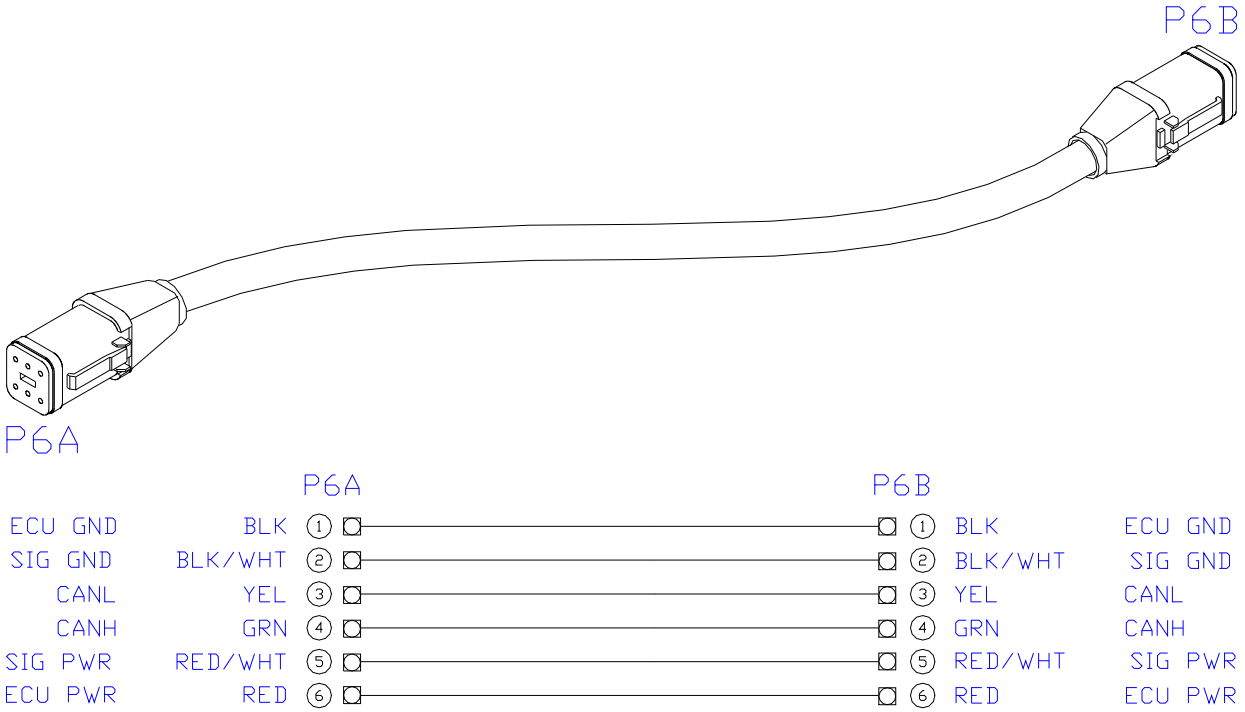

12.5 ITEM C10: 43230-04 – CABLE UC5 VALVE 2PIN DT TO 2PIN DT

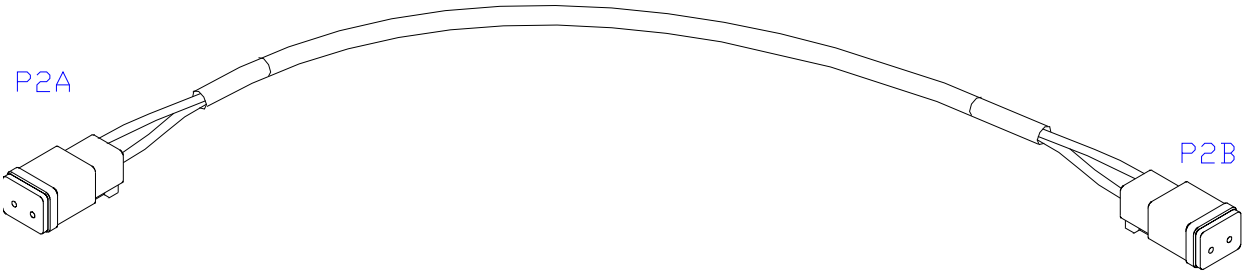

12.6 ITEM C20: 43240-01 – CABLE UC5 INTERFACE TILT DT

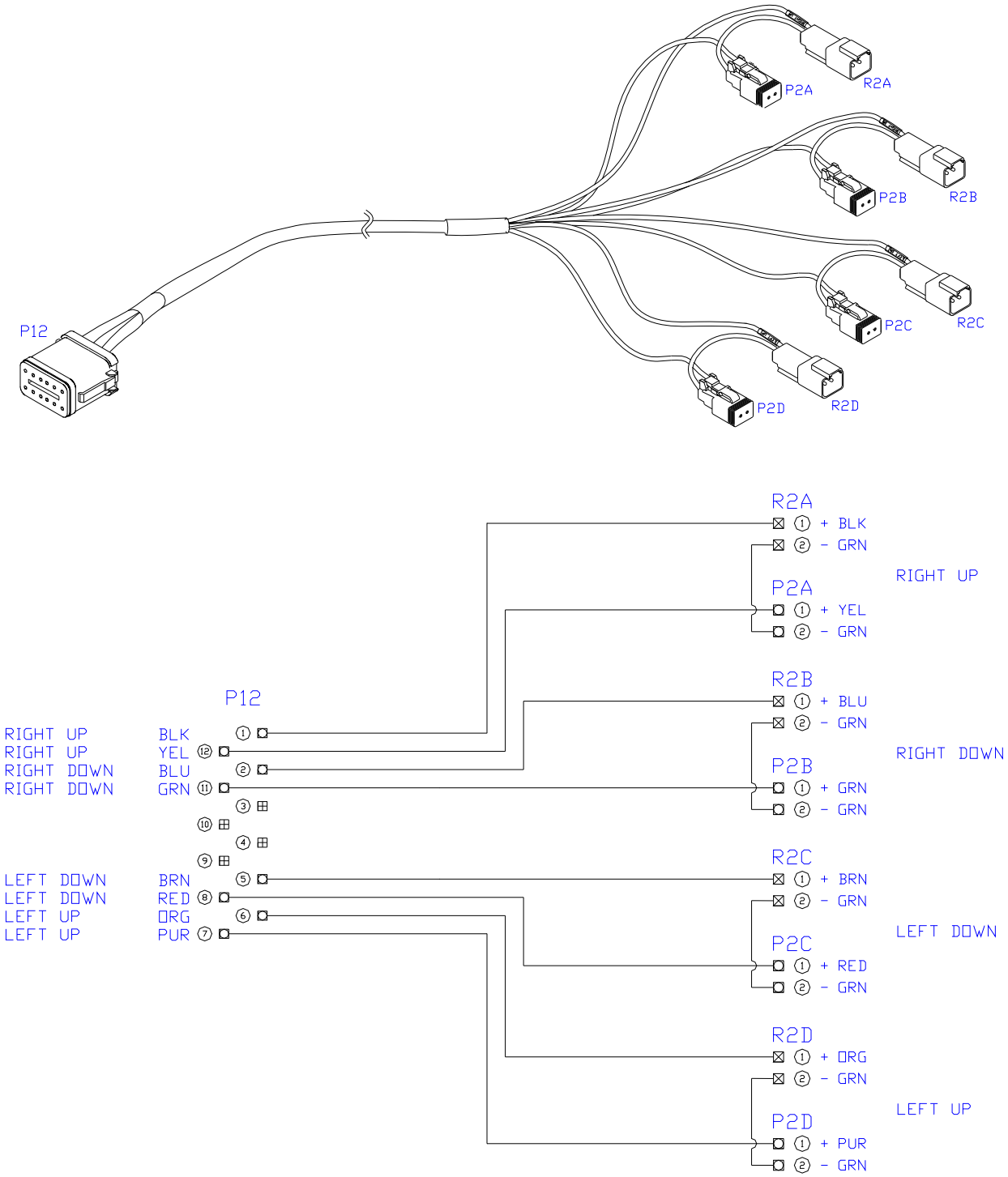

12.7 ITEM C21: 43240-07 – CABLE UC5 INTERFACE MAIN DT (WITH AUX 1&2)

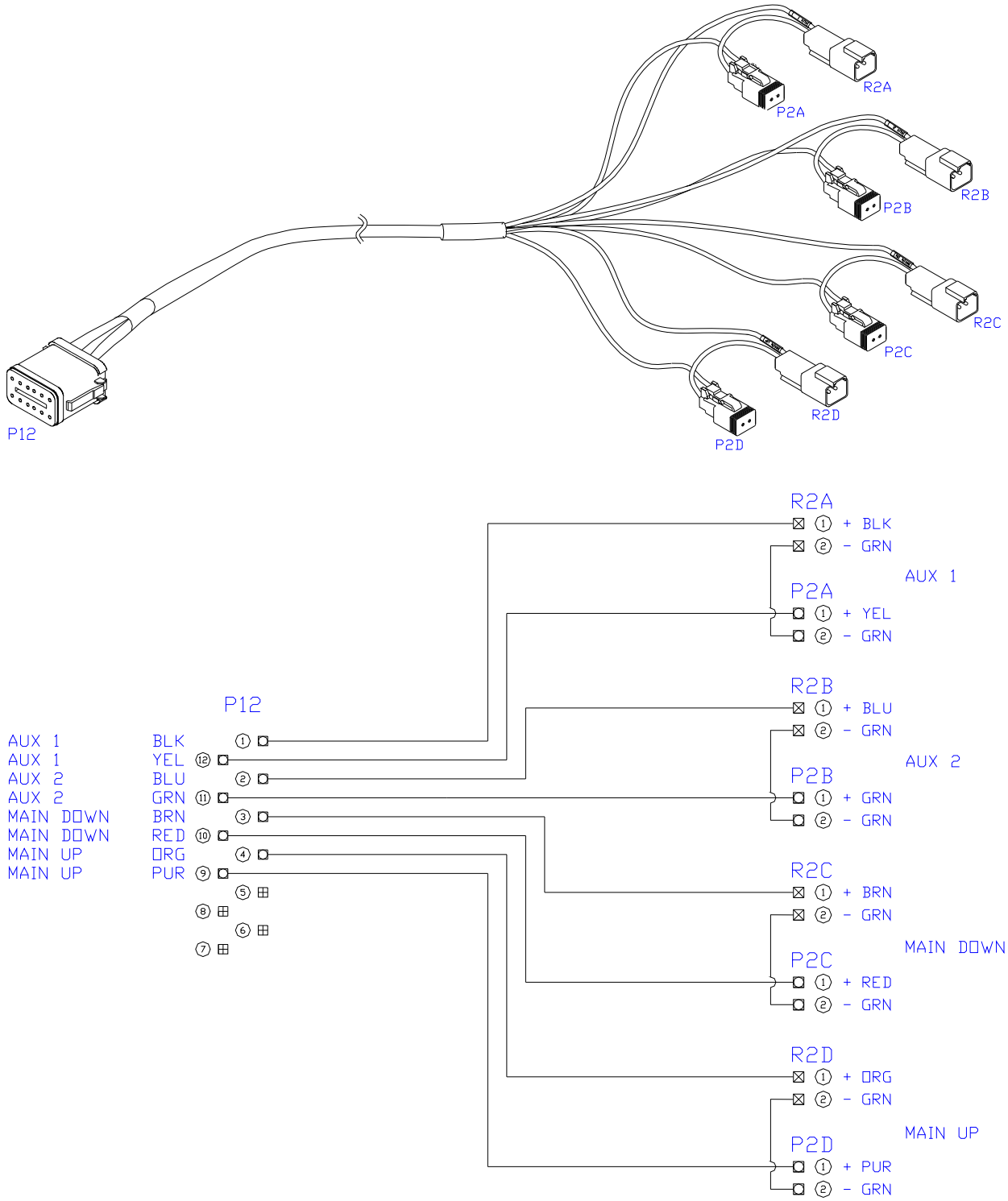

12.8 ITEM C30: 43250-06 – CABLE UC5 BATTERY PIGTAIL FUSED - 5A

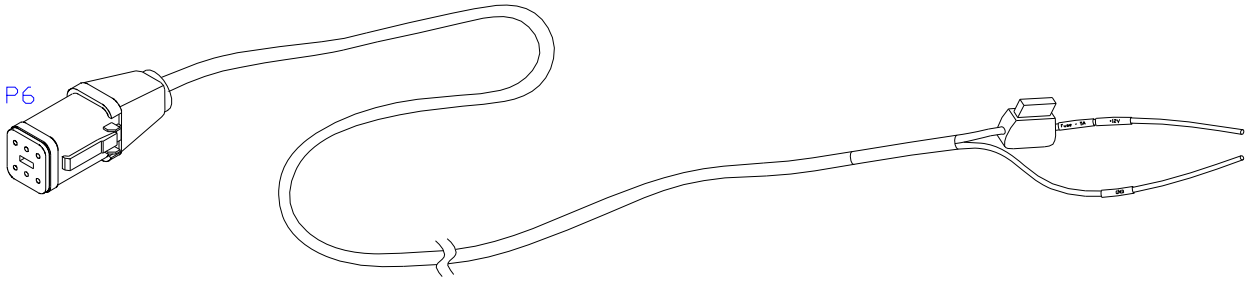

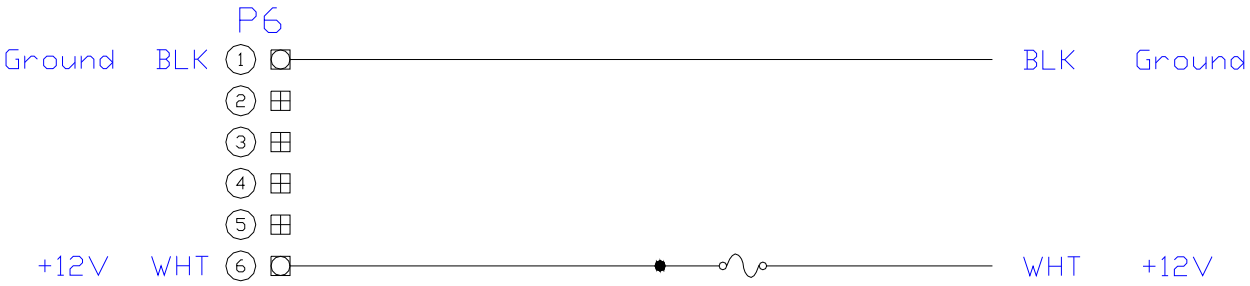

Canada
NORAC Systems International Inc.
Phone: (+1) 306 664 6711
Toll Free: 1 800 667 3921
Shipping Address:
3702 Kinnear Place
Saskatoon, SK
S7P 0A6

United States
NORAC, Inc.
Phone: (+1) 952 224 4142
Toll Free: 1 866 306 6722
Shipping Address:
6667 West Old Shakopee Road, Suite 111
Bloomington, MN
55438

Europe
NORAC Europe
Phone: (+33) (0)4 26 47 04 42
Shipping Address:
Rue de l'hermitage
01090 GUEREINS
France

www.norac.ca