NORAC®

UC5™ CAN BUS Spray Height Control System

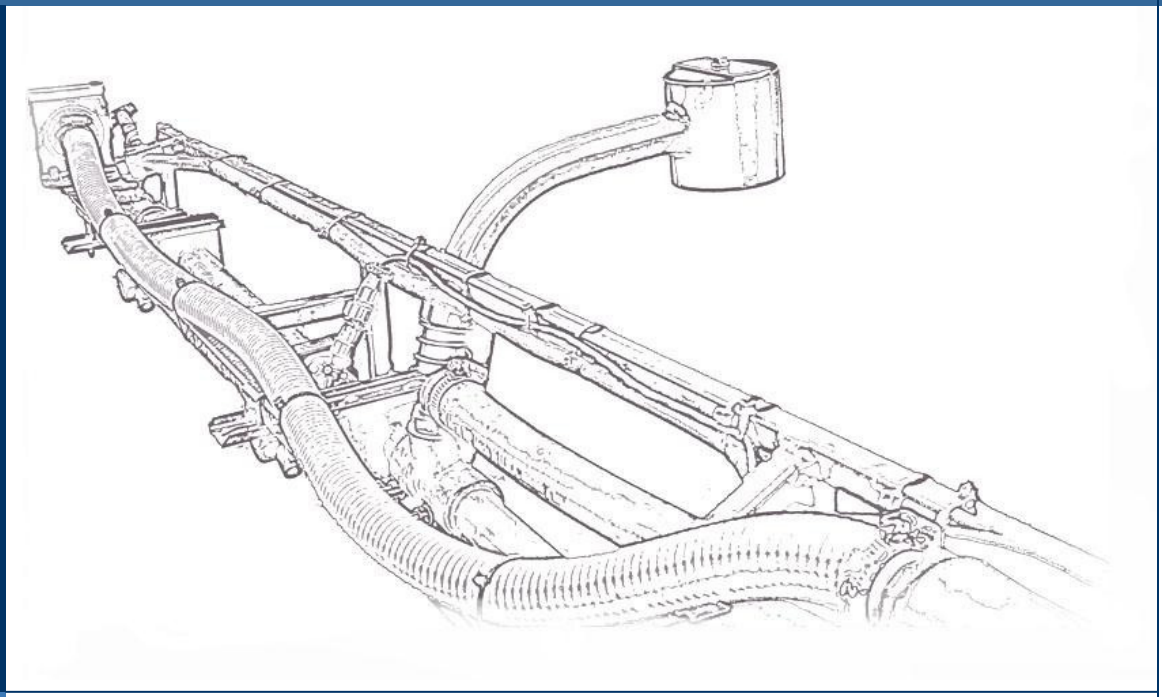

Hardi Aftermarket

New Navigator and New Commander

Installation Manual

HD07 & HD12

Printed in Canada

Reorder P/N: UC5-BC-HD07-INST Rev I (Hardi Aftermarket New Navigator and New Commander)

Contents

1 Introduction

Congratulations on your purchase of the NORAC UC5 Spray Height Control System. This system is manufactured with top quality components and is engineered using the latest technology to provide operating reliability unmatched for years to come.

When properly used the system can provide protection from sprayer boom damage, improve sprayer efficiency, and ensure chemicals are applied correctly.

Please take the time to read this manual completely before attempting to install the system. A thorough understanding of this manual will ensure that you receive the maximum benefit from the system.

Your input can help make us better! If you find issues or have suggestions regarding the parts list or the installation procedure, please don't hesitate to contact us.

⚠ Important

Every effort has been made to ensure the accuracy of the information contained in this manual. All parts supplied are selected to specially fit the sprayer to facilitate a complete installation. However, NORAC cannot guarantee all parts fit as intended due to the variations of the sprayer by the manufacturer.

Please read this manual in its entirety before attempting installation.

2 Technical Specifications

CAN ICES-3(A)/NMB-3(A)

This device complies with part 15 of the FCC Rules. Operation is subject to the following two conditions: (1) This device may not cause harmful interference, and (2) this device must accept any interference received, including interference that may cause undesired operation.

This equipment has been tested and found to comply with the limits for a Class A digital device, pursuant to part 15 of the FCC Rules. These limits are designed to provide reasonable protection against harmful interference when the equipment is operated in a commercial environment. This equipment generates, uses, and can radiate radio frequency energy and, if not installed and used in accordance with the instruction manual, may cause harmful interference to radio communications. Operation of this equipment in a residential area is likely to cause harmful interference in which case the user will be required to correct the interference at their own expense.

This Class A digital apparatus complies with Canadian ICES-003.

Pursuant to EMC Directive – Article 9, this product is not intended for residential use.

Table 1: System Specifications

Supply Voltage (rated)	12VDC
Supply Current (rated)	10A
Hydraulic Pressure (maximum)	3300 psi
Baud Rate	250 kbps
Clock Frequency (maximum)	96 MHz
Solenoid Valve PWM Frequency	300 Hz
Ultrasonic Sensor Transmit Frequency	50 kHz
Operating Temperature Range	0°C to 80°C

3 General UC5 System Layout

Figure 1 illustrates the general layout of the UC5 system components:

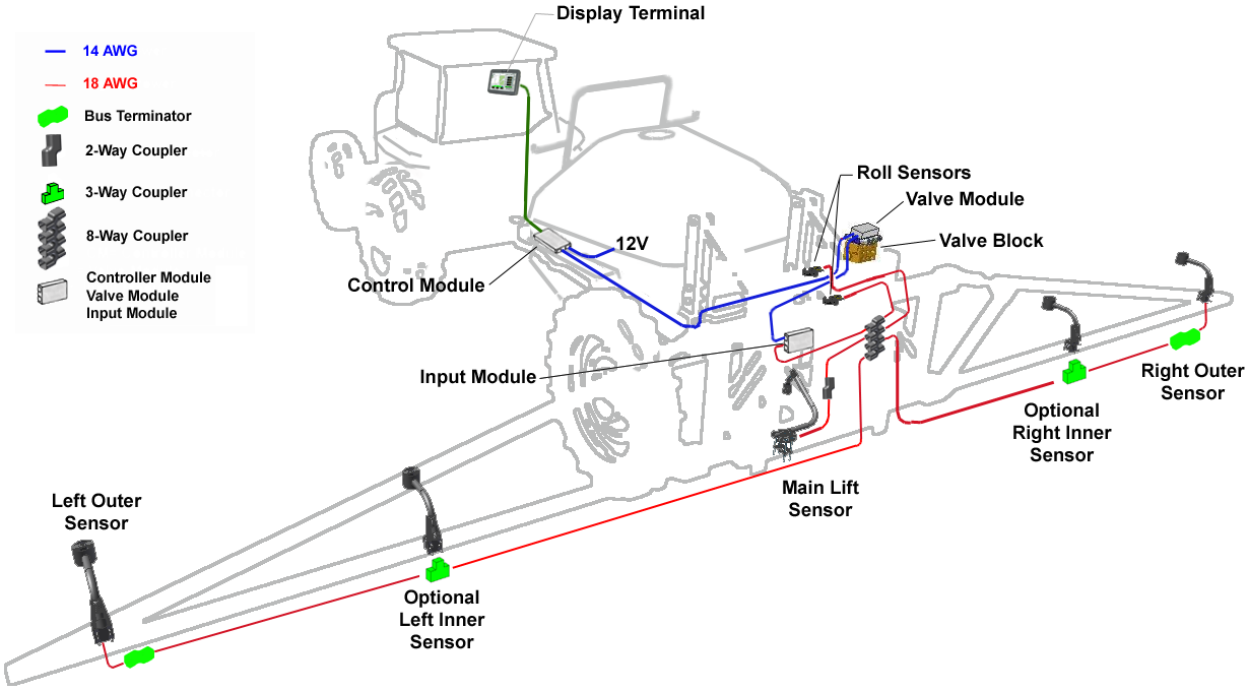

Figure 1: General UC5 System Layout

4 Kit Parts

4.1 Kit Overview

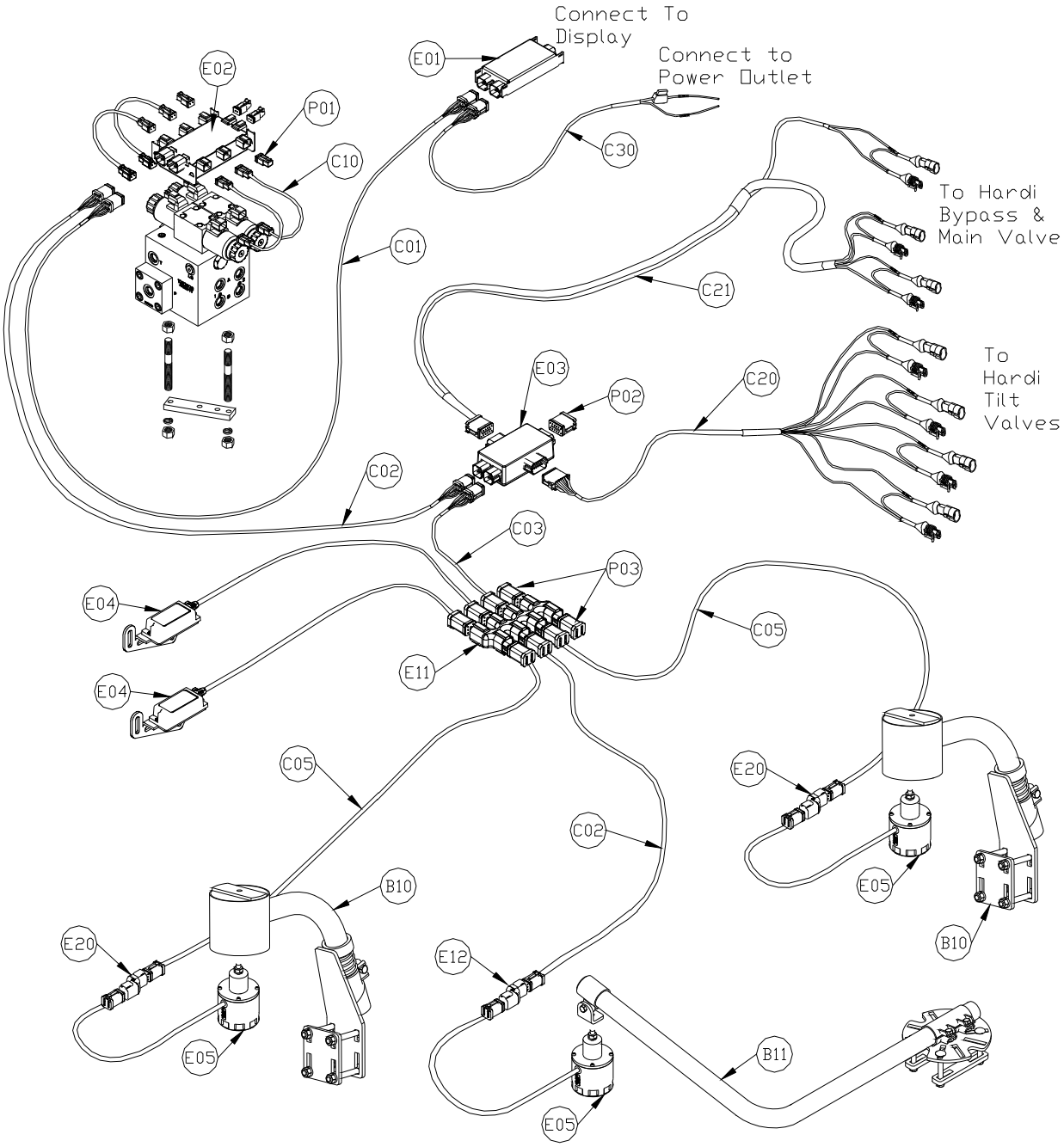

Figure 2: System Parts

4.2 Hydraulic Plumbing

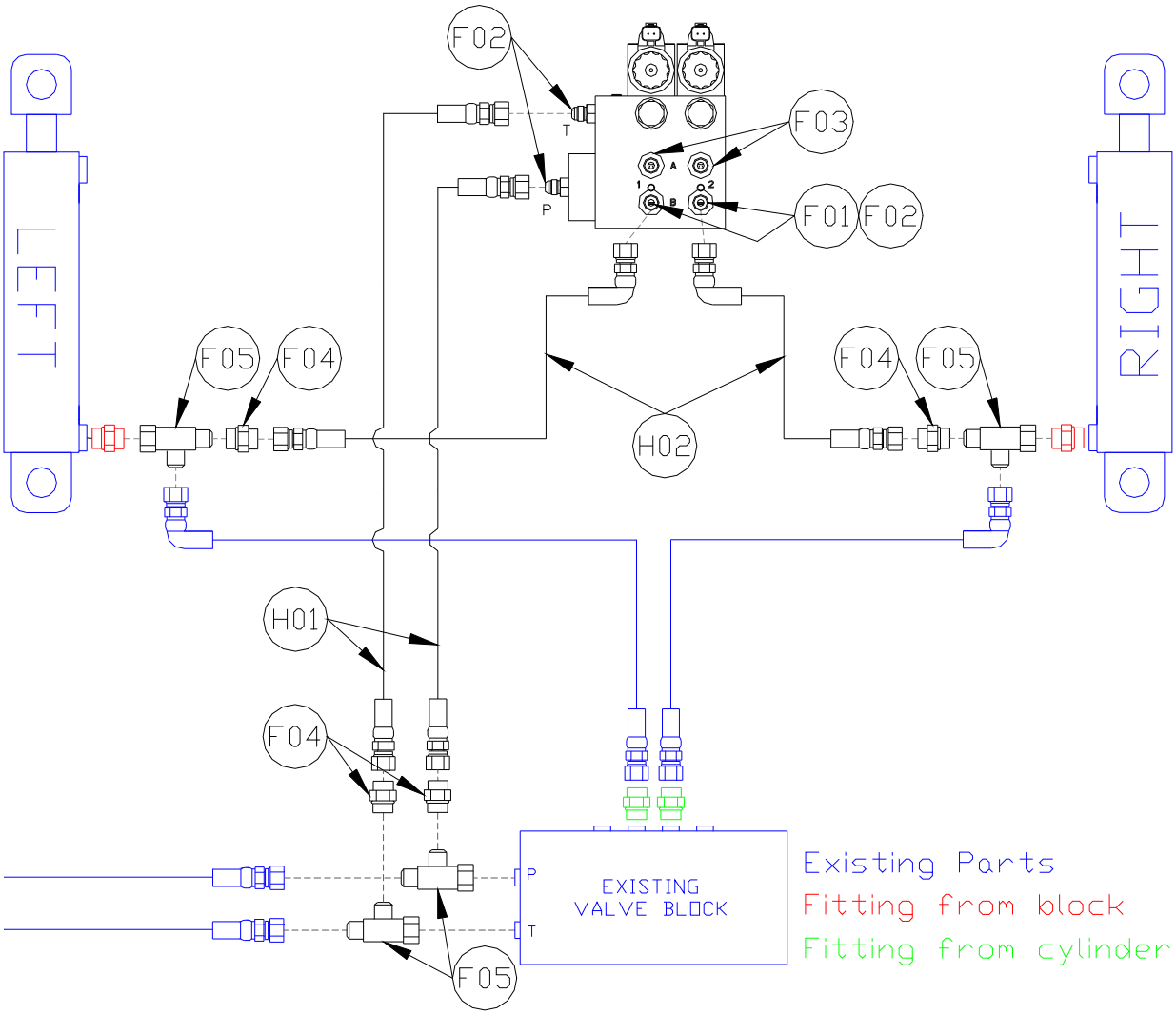

Figure 3: Hydraulic Plumbing: Single Acting (Force Boom)

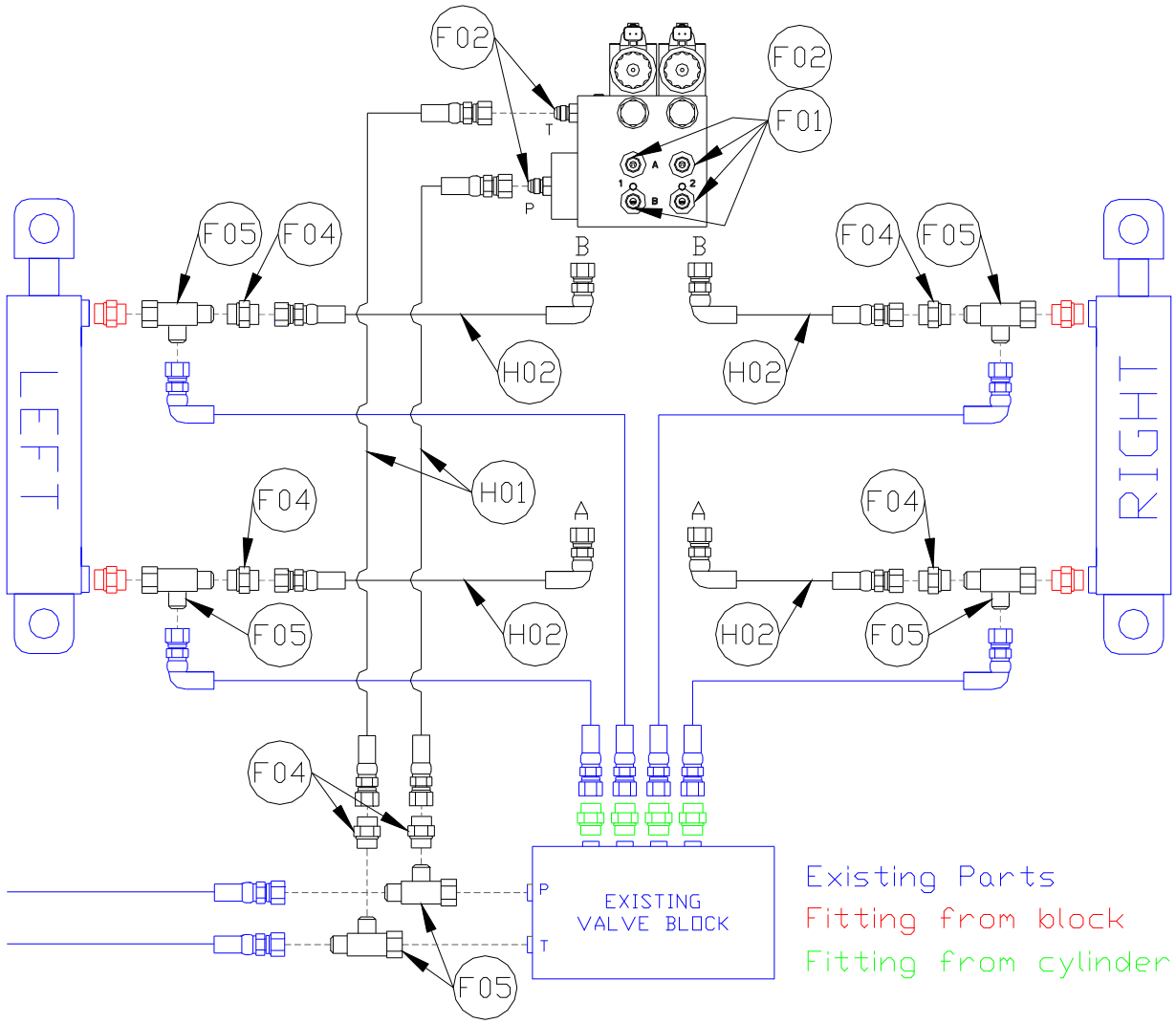

Figure 4: Hydraulic Plumbing: Double Acting (Eagle Boom)

4.3 List of Parts

This manual covers installation using both BSP and flat faced o-ring fittings. Before starting the installation compare the NORAC kit hydraulics to the sprayer hydraulics to be sure the correct fitting style is supplied. When performing the hydraulic install be sure to follow the section for the correct style of fittings.

Item	Part Number	Name	Quantity
B05	44706-01	KIT CABLE TIE BLACK 10 PCS 21 IN 150 PCS 7.5 IN	1
B10	44728	MOUNTING BRACKET COMPLETE UC4 BREAKAWAY EXTENDED	2
B11	44743	MOUNTING BRACKET MAIN LIFT SENSOR UC4 PLUS	1
C01	43220-10	CABLE UC5 NETWORK 14 AWG 10M	1
C02	43220-01	CABLE UC5 NETWORK 14 AWG 1M	2
C03	43220-03	CABLE UC5 NETWORK 14 AWG 3M	1
C05	43210-20	CABLE UC5 NETWORK 18 AWG 20M	2
C10	43230-04	CABLE UC5 VALVE 2PIN DT TO 2PIN DT	4
C20	43240-08	CABLE UC5 INTERFACE TILT AMP (SUPERSEAL)	1
C21	43240-09	CABLE UC5 INTERFACE MAIN AMP (SUPERSEAL 240" W/ BYPASS)	1
C30	43250-06	CABLE UC5 BATTERY PIGTAIL FUSED	1
E01	43710	UC5 CONTROLLER MODULE	1
E02	43720	UC5 VALVE MODULE	1
E03	43732	UC5 INPUT MODULE PASS THRU	1
E04	43741	UC5 ROLL SENSOR VER. 2	2
E05	43750	UC5 ULTRASONIC SENSOR	3
E11	43765	UC5 NETWORK COUPLER 8-WAY	1
E12	43764	UC5 NETWORK COUPLER 2-WAY	1
E20	43764T	UC5 NETWORK COUPLER 2-WAY WITH TERMINATOR	2
M02	UC5-BC-HD07-INST	MANUAL INSTALLATION UC5 HARDI AFTERMARKET NEW NAVIGATOR AND NEW COMMANDER	1
P01	106034	UC5 NETWORK 2 PIN PLUG	4
P02	106602	UC5 NETWORK 12 PIN PLUG (A-KEY)	1
P03	105882	UC5 NETWORK 6 PIN PLUG	2
V01	44963D	VALVE BLOCK ASSEMBLY 2 STATION CC/LS PROP DT 4 BOLT	1

4.4 HD07 Hydraulics (For Sprayers with BSP Fittings)

Item	Part Number	Name	Quantity
H01	44863-01	HOSE ASSEMBLY 122R2-06 36 IN L 6FJX 6FJX	2
H02	44863-07	HOSE ASSEMBLY 122R2-06 60 IN L 6FJX 6FJX90	4
H10	44865-63	HYDRAULICS FITTING KIT - HD7	1

4.4.1 Hydraulic Fitting Kit Details (P/N: 44865-63)

Item	Part Number	Name	Quantity	Picture
F01	44928	ORIFICE INSERT .047 IN ONE WAY	4	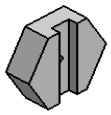
F02	103312	MALE ADAPTER - 6MB 6MJ	6	
F03	104369	PLUG - 6MBP	2	
F04	105431	4FBSPPX 6MJ	6	
F05	105432	4MBSPPT 4FBSPPRX	6	

Fitting Name Example:

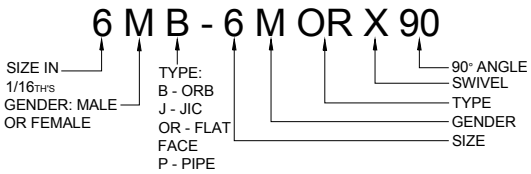

Important

The 6MBP plugs (F03) are only used for the single acting plumbing installation.

4.5 HD12 Hydraulics (For Sprayers with Flat Faced O-Ring Fittings)

Item	Part Number	Name	Quantity
H01	44863-48	HOSE ASSEMBLY 122R2-06 40IN L 6FORX90 6FORX	2
H02	44863-68	HOSE ASSEMBLY 122R2-06 70IN L 6FORX90 6FORX	4
H10	44865-78	HYDRAULICS FITTING KIT - HD12	1

4.5.1 Hydraulic Fitting Kit Details (P/N: 44865-78)

Item	Part Number	Name	Quantity	Picture
F01	44928	ORIFICE INSERT .047 IN ONE WAY	4	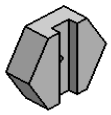
F02	44917	MALE ADAPTER - 6MB-6MOR MACHINED ORB	6	
F03	104369	PLUG - 6MBP	2	
F04	106703	FEMALE TO MALE ADAPTER - 4FOR 6MOR	6	
F05	104691	TEE ADAPTER - 4FORXR 4MORT	6	

Fitting Name Example:

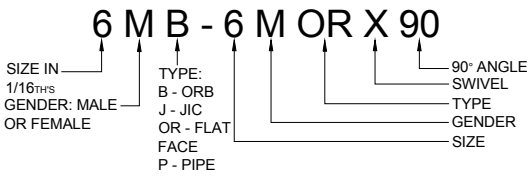

Important

The 6MBP plugs (F03) are only used for the single acting plumbing installation.

4.6 Optional Pressure and Tank Hose Kit (P/N: 44865-49)

If a separate pressure and tank line from the tractor to the NORAC valve block is required, the hoses and fittings can be ordered as a kit (P/N: 44865-49).

Part Number	Name	Quantity
44863-11	HOSE ASSEMBLY 122R2-06 402 IN L 6FJX 8MB WITH QUICK COUPLER	2
103312	MALE ADAPTER - 6MB 6MJ	2

Important

Do not use high speed power tools/drills when installing hardware.

Important

The use of dielectric grease is not recommended on any NORAC electrical connections.

Important

To ensure all stainless steel hardware does not gall or seize apply a light coating of the supplied Permatex Anti-seize grease to all threaded parts upon installation. Permatex Anti-seize lubricant is preferred, but other similar anti-seize products may be used.

5 Pre-Install Checklist

The pre-install checklist is necessary to check the existing sprayer functionality before the installation.

1. Unfold the sprayer over a flat, unobstructed area (i.e. no power lines…etc.).
2. Ensure all boom-fold operations are functional (place a check mark in boxes below).
3. Bring engine to field-operational RPM and record below.
4. Record the time (seconds) it takes for a full stroke for all boom functions. To ensure repeatable measurements, take the average of 3 trials.
5. Not all sprayers will have the functions listed below in **Figure 5**.

⚠ Important

Ensure the boom has sufficient travel so it does not contact the ground during these tests.

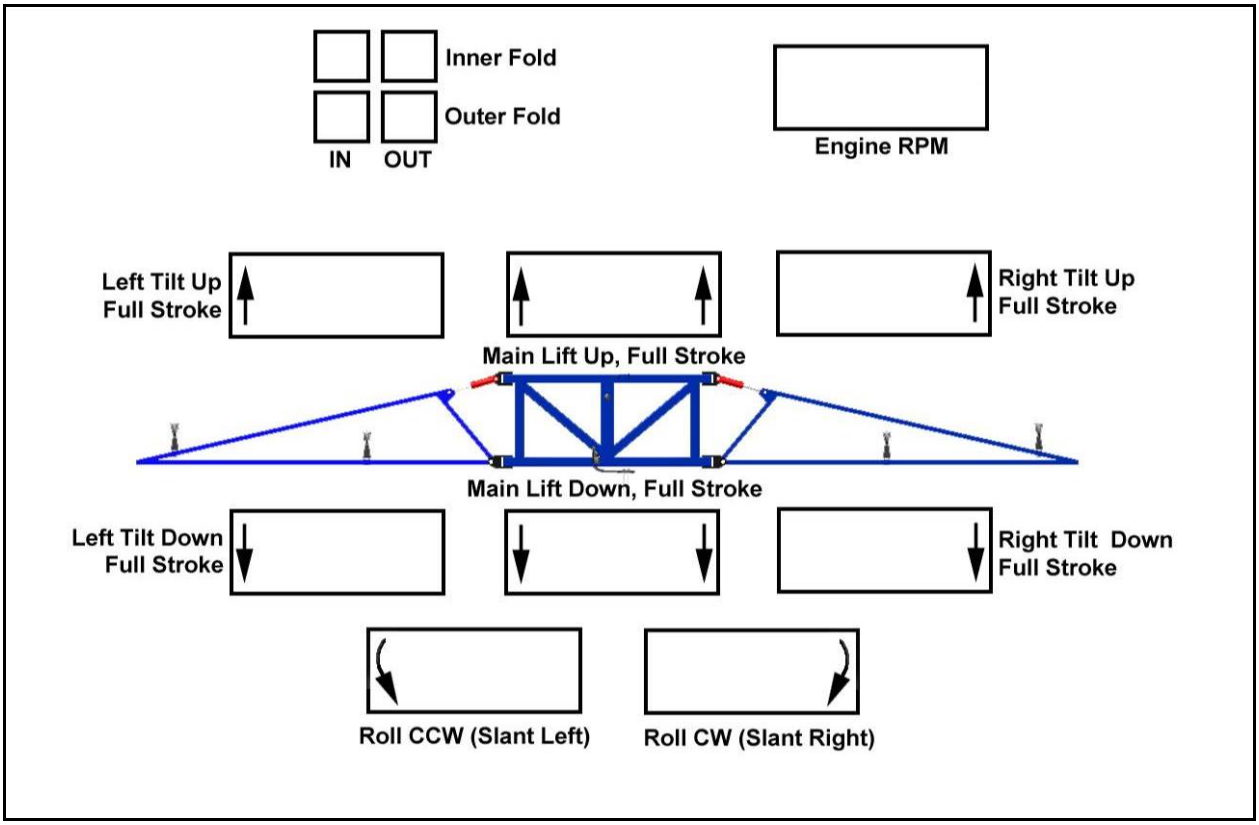

Figure 5: Pre-Install Boom Speeds

6 Ultrasonic Sensor Installation

6.1 Bracket Assembly

Assemble the breakaway sensor bracket as illustrated in **Figure 6**, following the instructions below.

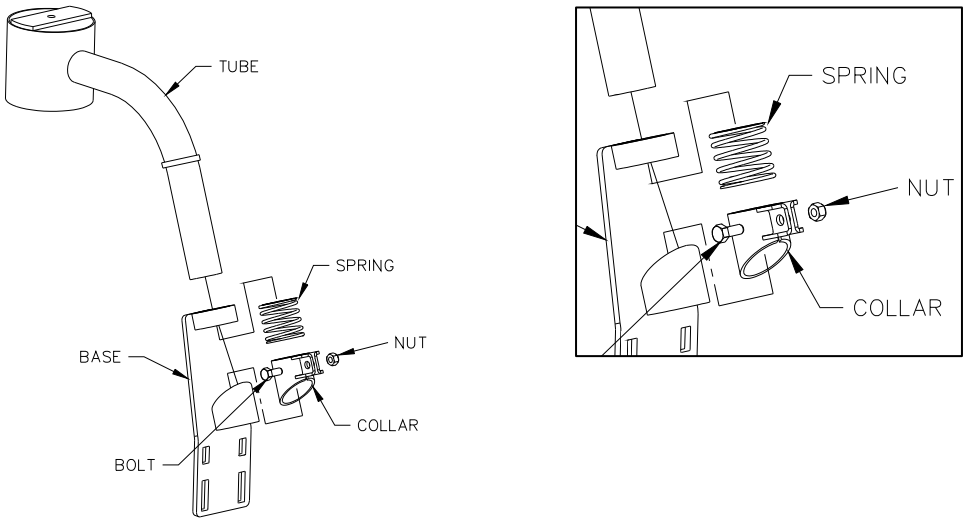

Figure 6: Breakaway Bracket Assembly

1. Compress the spring and insert it together with the collar into the base.
2. Slide the tube through the assembled part.
3. Using the bolt and nut, tighten the collar to the tube with the sensor tube centered.
4. Apply a small amount of grease to the rotating surfaces of the bracket.

6.2 Ultrasonic Sensor Serial Number Arrangement

When installing the UC5 sensors, start with the smallest serial number on the left-hand side, and proceed to the largest serial number on the right hand side. Each UC5 sensor has a serial number stamped on the sensor housing.

Apply a light coating of the supplied Permatex Anti-seize grease to all threaded parts upon installation.

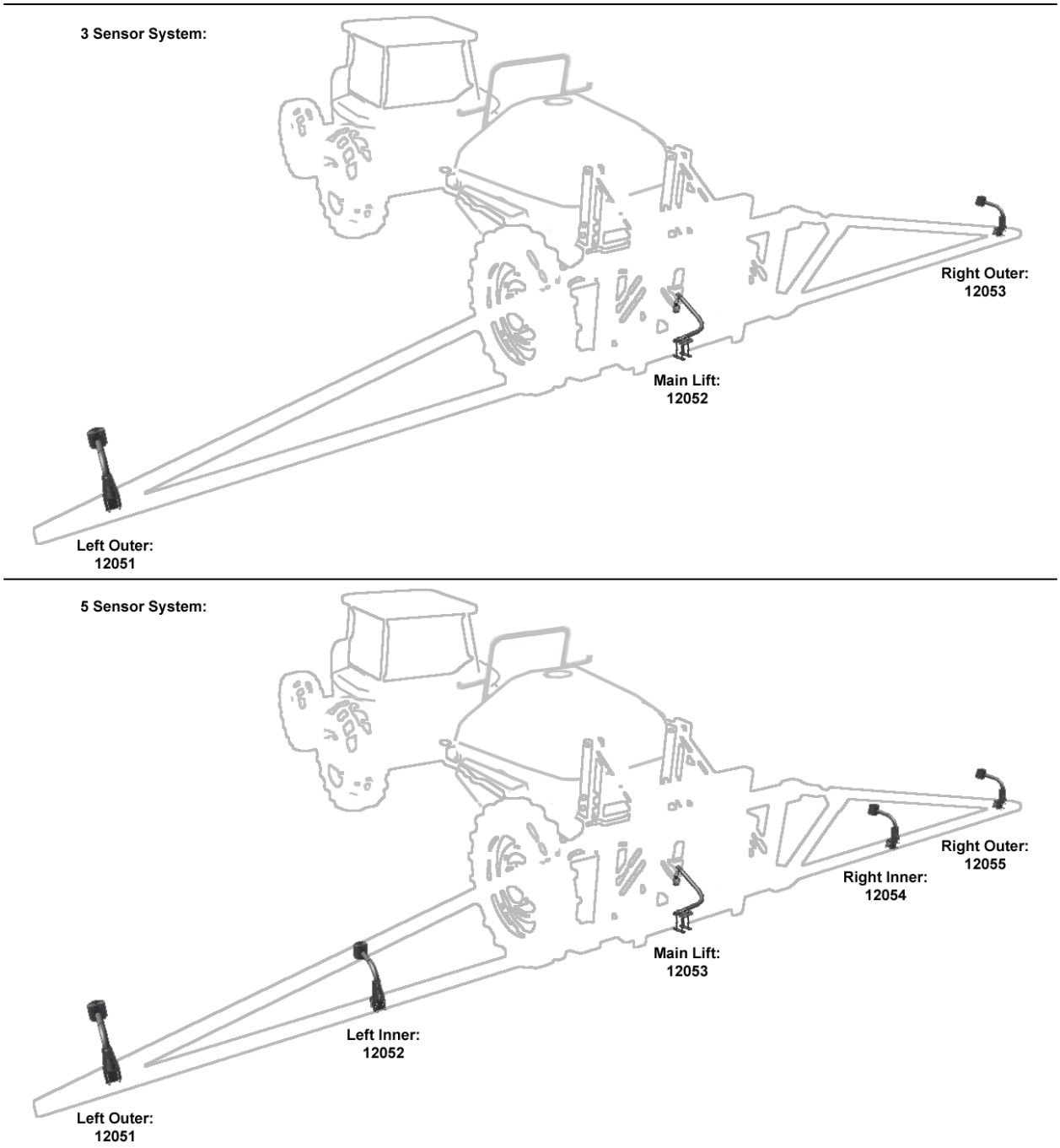

Figure 7: Sensor Serial Number Arrangement

6.3 Ultrasonic Sensor Mounting Guidelines

The following guidelines will ensure optimal sensor performance and prevent sensor measurement error. These rules should be followed for both the wing sensors and the main lift (middle) sensor.

1. In its lowest position, the sensor must be 9 inches (23 cm) or more from the ground **(A)**.

2. The centerline of the acoustic cone should be approximately vertical at normal operating heights **(A)**.

3. The bottom of the sensor must be at least 9 inches in front of the spray nozzles and boom structure **(B)**. (This does not apply for the main lift sensor)

4. The bottom of the sensor must be at least 9 inches above the spray nozzles **(C)**.

5. Ensure there are no other obstructions with a 12 inch (23 cm) diameter circle projected directly below the sensor **(D)**.

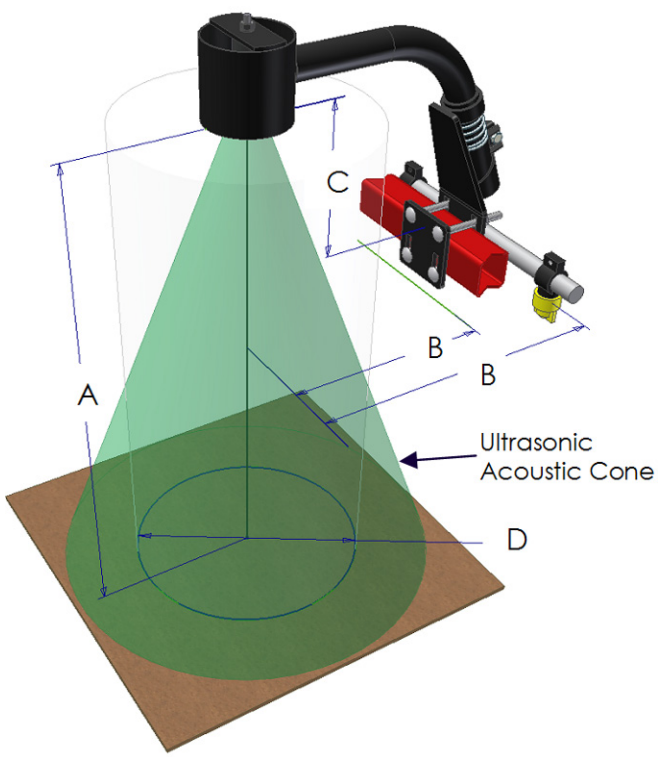

Figure 8: Sensor Mounting Guidelines

6.4 Wing Sensor Installation

1. The sensor bracket should be oriented forward (ahead of the boom).

2. Typically the best mounting location for the wing sensor brackets will be near the end of the boom tips, approximately two feet (60cm) from the end.

3. Depending on the boom design, some breakaway sections will lift upwards as they break back. If the sensor is mounted to this portion of the boom, the system will force the boom downwards towards the ground as the boom folds backwards.

4. Mount the NORAC UC5 ultrasonic sensor into the sensor bracket and run the sensor cable through the sensor tube.

⚠ Important

A problem can arise if a sensor is not mounted correctly. It is possible for the sensor to read off of the boom instead of the ground. This may only become apparent once the control system is switched from soil to crop mode.

Also be careful that the sensor bracket does not collide with any other part of the boom when the boom is folded to transport position. If possible, mount the sensor brackets while the booms are folded to ensure they will not cause interference.

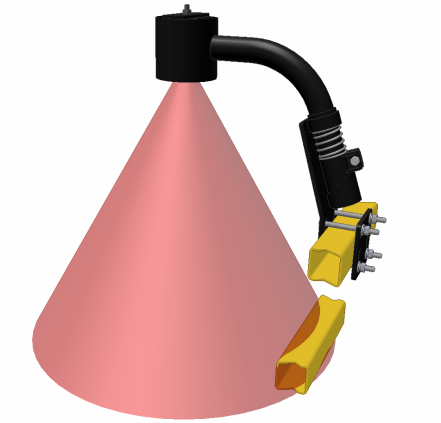

Figure 9: Sensor Reading Off Boom

6.5 Main Lift Sensor Installation

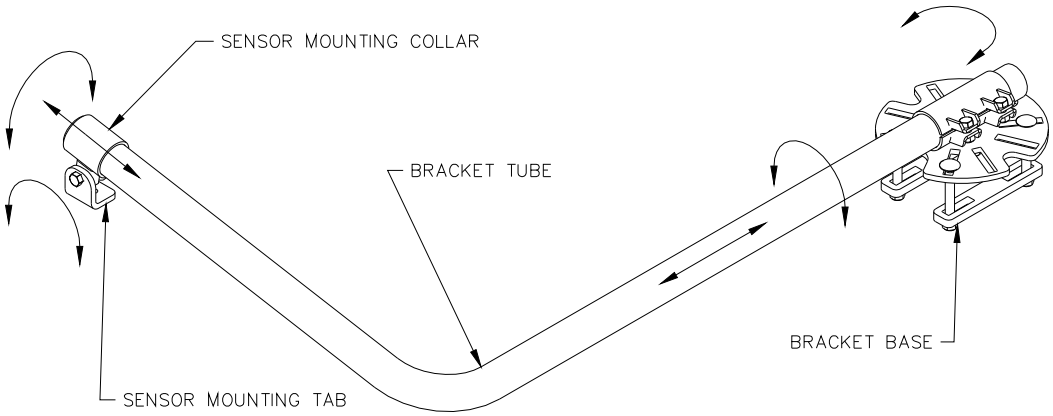

Figure 10: Main Lift Bracket Assembly

1. There are a variety of ways to mount the main lift bracket on most sprayers. The bracket should position the sensor approximately in the center of the sprayer, forward of the boom. An example of this mounting is illustrated in **Figure 11**.

2. Mount the ultrasonic sensor to the main lift bracket. Run the sensor cable down the center of the main lift bracket tube.

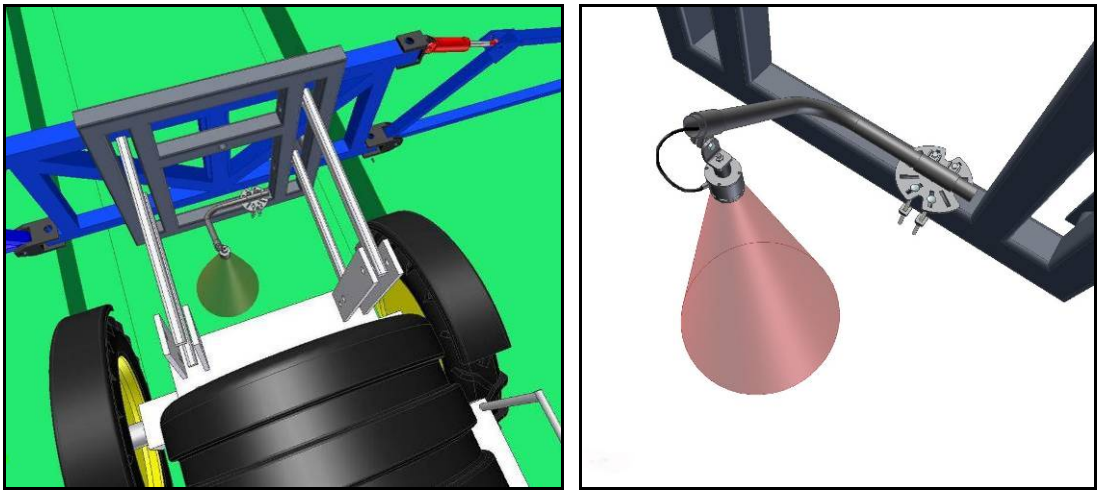

Figure 11: Example Mounting of the Main Lift Bracket

⚠ Important

Avoid mounting the main lift sensor over or near a wheel-track. Measurements from the wheel-track do not provide an accurate crop height and will cause measurement and control error.

Ensure the bracket does not collide with any other part of the sprayer throughout the full range of main lift motion.

7 Roll Sensor Installation

7.1 Bracket Assembly

1. Securely mount the roll sensors to the included roll sensor brackets using the #6 machine screws. Tighten screws to 10 in-lbs (1.1 Nm).

2. The orientation of the mounted roll sensor to the roll sensor bracket will depend on the bracket mounting. The roll sensor CANbus connector must be pointing towards the right side of the sprayer (when looking from the rear of the sprayer).

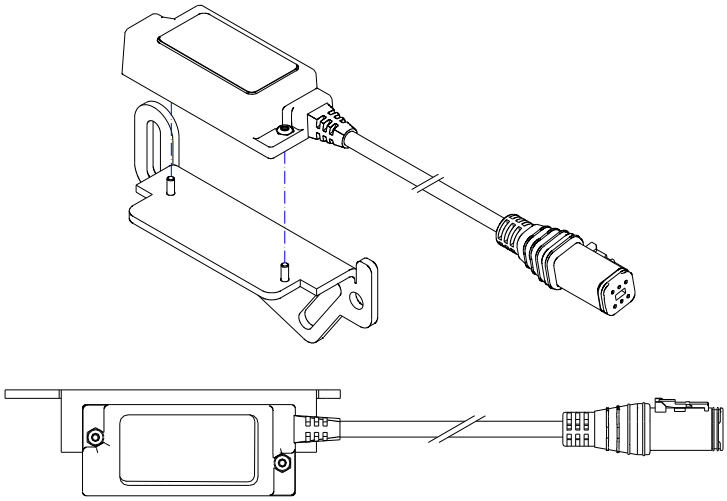

Figure 12: Mounting Roll Sensor to Bracket

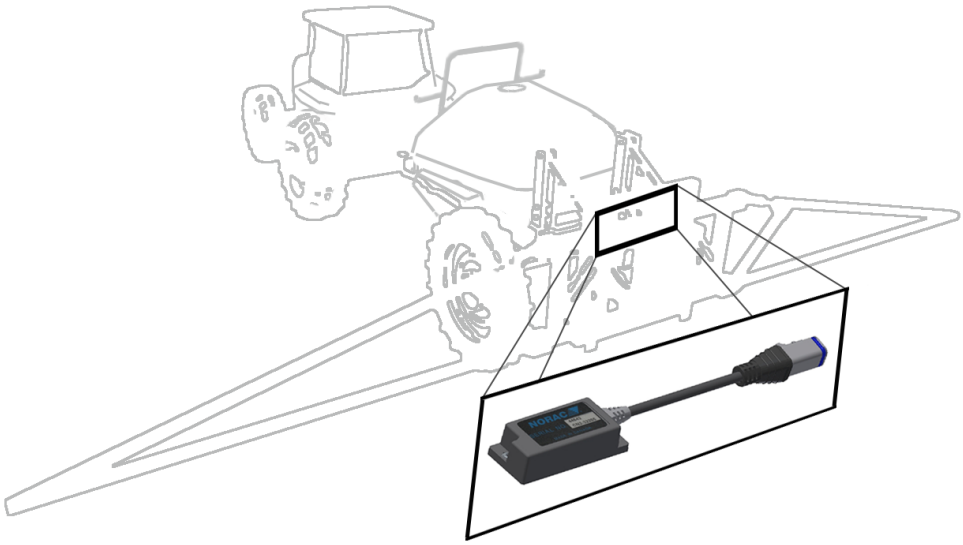

Figure 13: Roll Sensor Orientation - Connector Facing Right Wing

7.2 Roll Sensor Mounting Guidelines: Trapeze-Suspended Booms

1. When mounting the roll sensors, mount one to the trapeze link (boom frame) and one to the trapeze support (chassis). For optimal performance, minimize the distance from the boom frame roll sensor to the pivot point (A) and minimize the vertical distance between the chassis roll sensor and the pivot point (B).

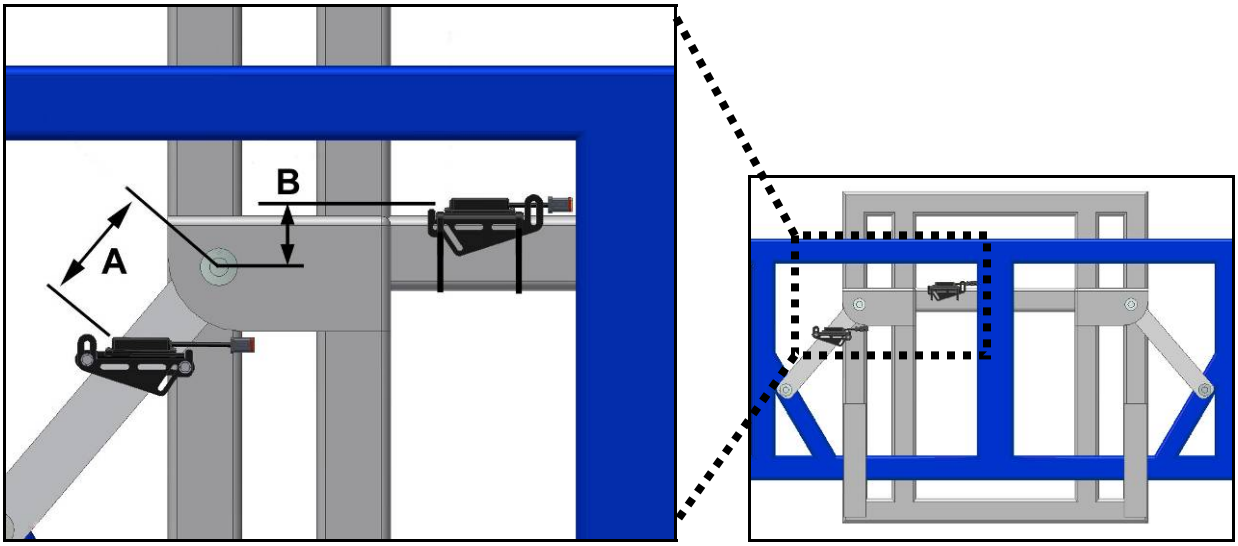

Figure 14: Roll Sensor Mounting on a Trapeze Suspended Boom

2. Ensure the roll sensors are relatively level when the sprayer boom and chassis are level.

3. Both roll sensor cables should be pointing towards the right hand wing of the sprayer.

4. Ensure both roll sensors are mounted adequately and that the cables provide enough slack to allow sufficient boom roll.

7.3 Roll Sensor Mounting on a Twin Force / Force FTZ Boom

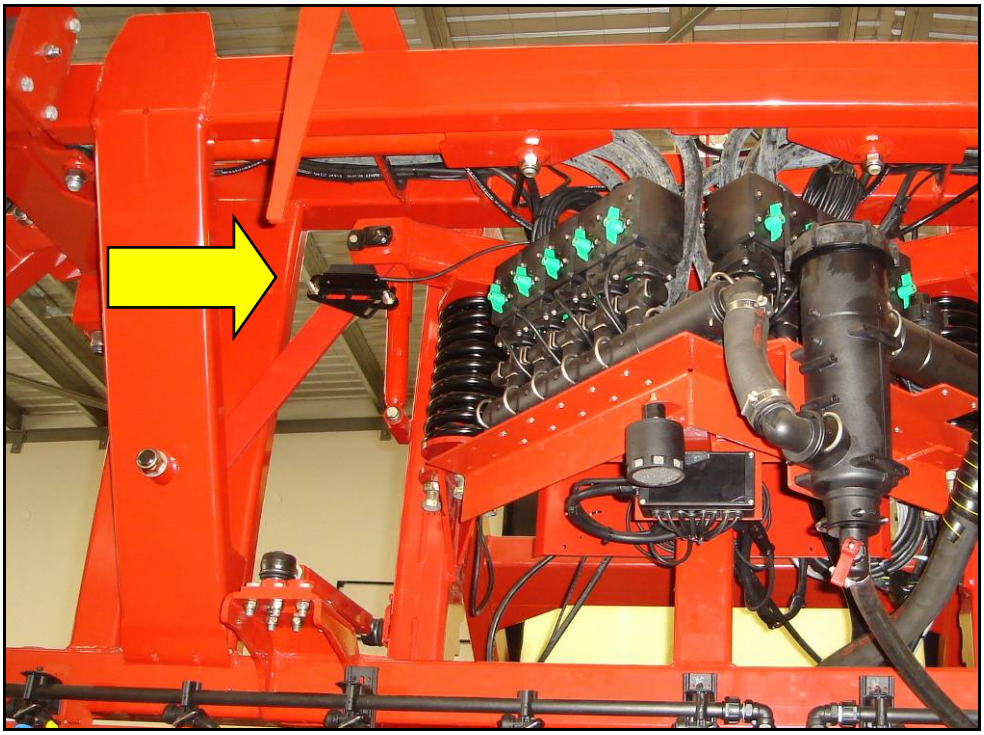

Figure 15: Boom Frame Roll Sensor Mounting (Viewed from the rear of sprayer)

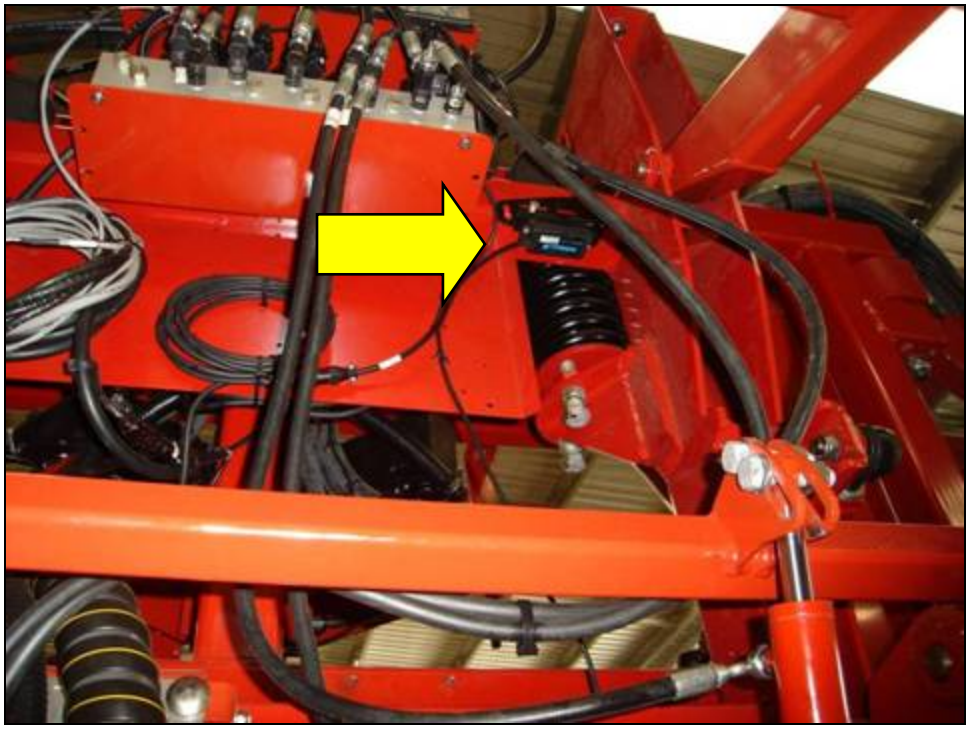

Figure 16: Chassis Roll Sensor Mounting (Viewed from the front of sprayer)

7.4 Roll Sensor Mounting on an Eagle Boom

Figure 17: Roll Sensor Mounting (Viewed from the rear of sprayer)

8 Module Installation

An optional module mounting bracket kit is available for purchase from NORAC. The mounting brackets are compatible with control modules and input modules. One kit is needed per module.

Item	Part Number	Name	Quantity
B20	43708	UC5 MOUNTING BRACKET KIT (CONTROL AND INPUT MODULES)	1

8.1 Control Module

1. Refer to **Figure 1** and **Figure 18**.

2. Securely mount the control module (E01) in the cab or on the sprayer. Refer to the display kit installation manual to determine the best mounting location.

3. Connect the display terminal to the control module using the display CANbus cable. This cable must be connected to the end of the control module with only one Deutsch connector.

4. Connect the power cable (C30) to one of the two CANbus connectors on the control module. Connect the other end of the power cable to an appropriate power source.

5. Route cable C01 from the other CANbus connector towards the rear of the sprayer.

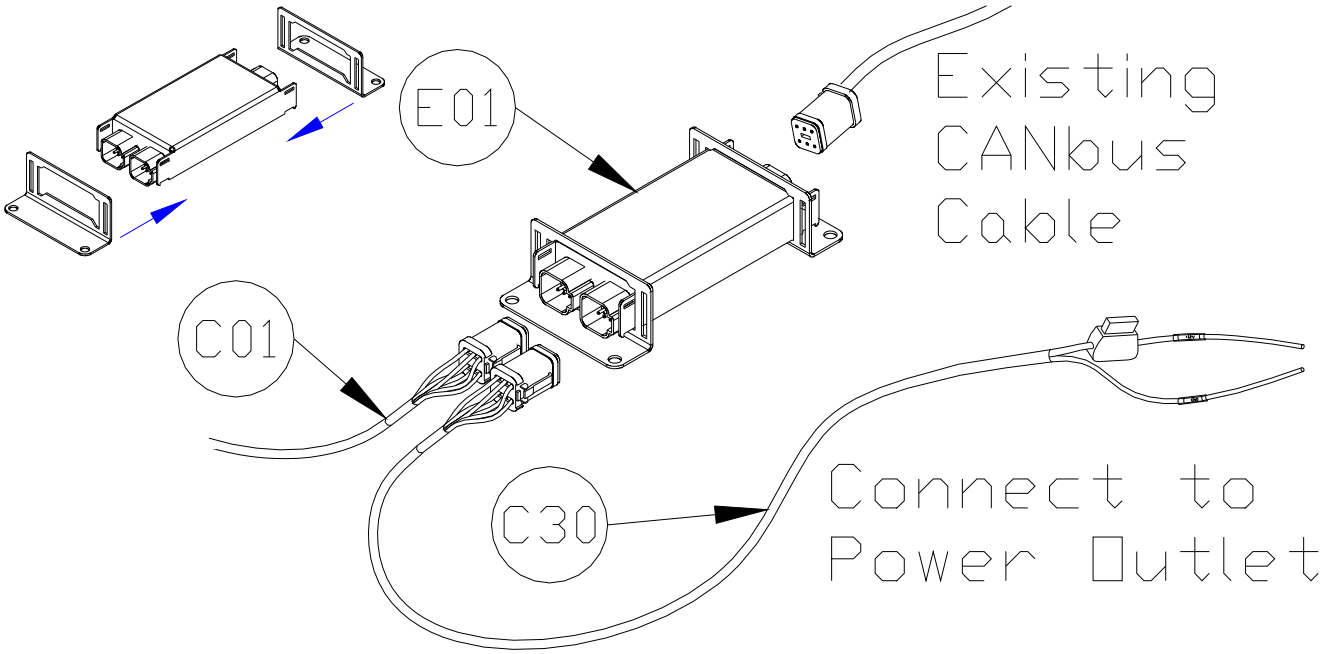

Figure 18: Control Module Mounting

8.2 Valve Module

1. Install the valve module (E02) to the top of the NORAC valve block. Orient the 6-pin Deutsch (CANbus) connectors towards the "P" and "T" ports with the label facing up.

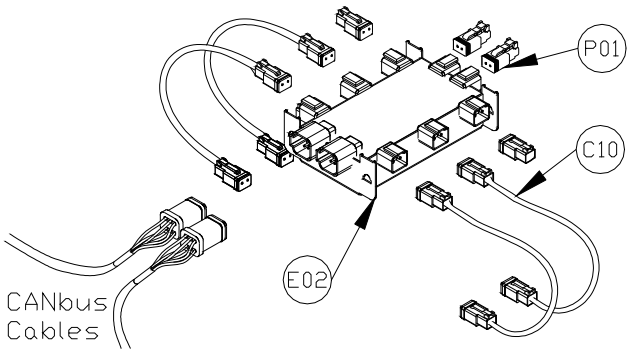

Output Number	Normal Function
1	Left Up
2	Left Down
3	Right Up
4	Right Down
5	Option 1
6	Option 2
7	Option 3
8	Option 4

Figure 19: Valve Module

2. Verify the valve coil connectors are oriented vertically (**Figure 20**).

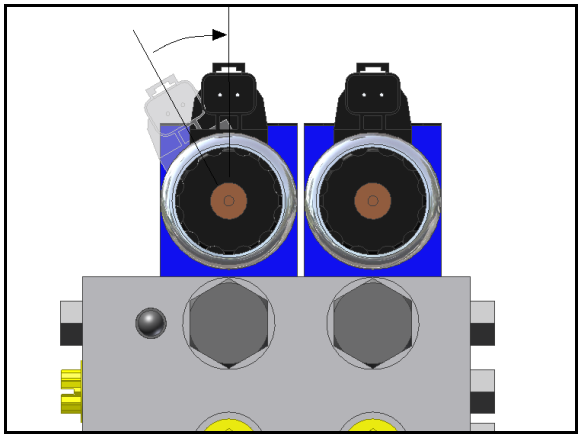

Figure 20: Align Coils

3. Place the valve module between the valve coils. Slide a valve mounting bracket over the connectors of the valve module and the valve coil connectors. This may require flexing the plastic bracket slightly (**Figure 21**).

4. Ensure the bracket is pushed over the connectors far enough to allow the clips to engage behind the valve connectors.

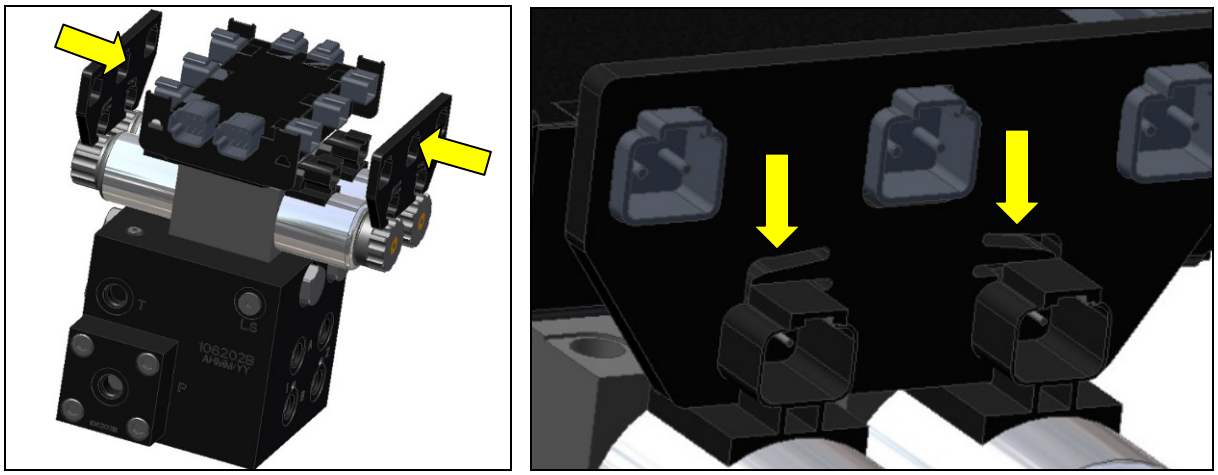

Figure 21: Valve Module Bracket Installation

5. Connect the valve module CANbus to cable C01 from the control module. Route cable C02 from the other CANbus connector to the input module.

6. With the valve module securely mounted to the valve block, connect the valve cables (C10), to the valve coils. Insert the 2-pin plugs (P01) into the unused 2-pin connectors on the valve module.

7. Connect the temperature probe to the valve block using the supplied 3/8" x 1/2" hex bolt.

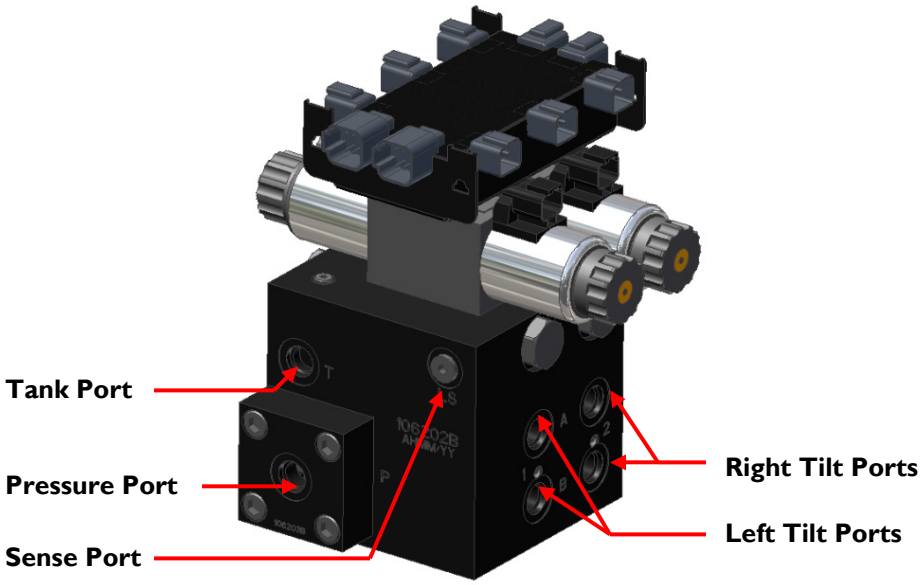

Figure 22: Valve Module - Valve Coil Connections

8.3 Input Module

1. Install the input module (E03) on the boom near the Hardi valve block. Secure it to the boom using cable ties or optional brackets

2. Connect the free end of the CANbus cable (C02) from the valve module to the input module.

3. Insert the 12 pin plug (P02) into the *OEM 3* connector on the end of the input module.

4. Connect the 12 pin connector on the tilt interface cable (C20) to the *Thru 2* connector on the side of the input module.

5. Insert the connectors on the other end of C20 into the tilt connectors on the Hardi solenoids

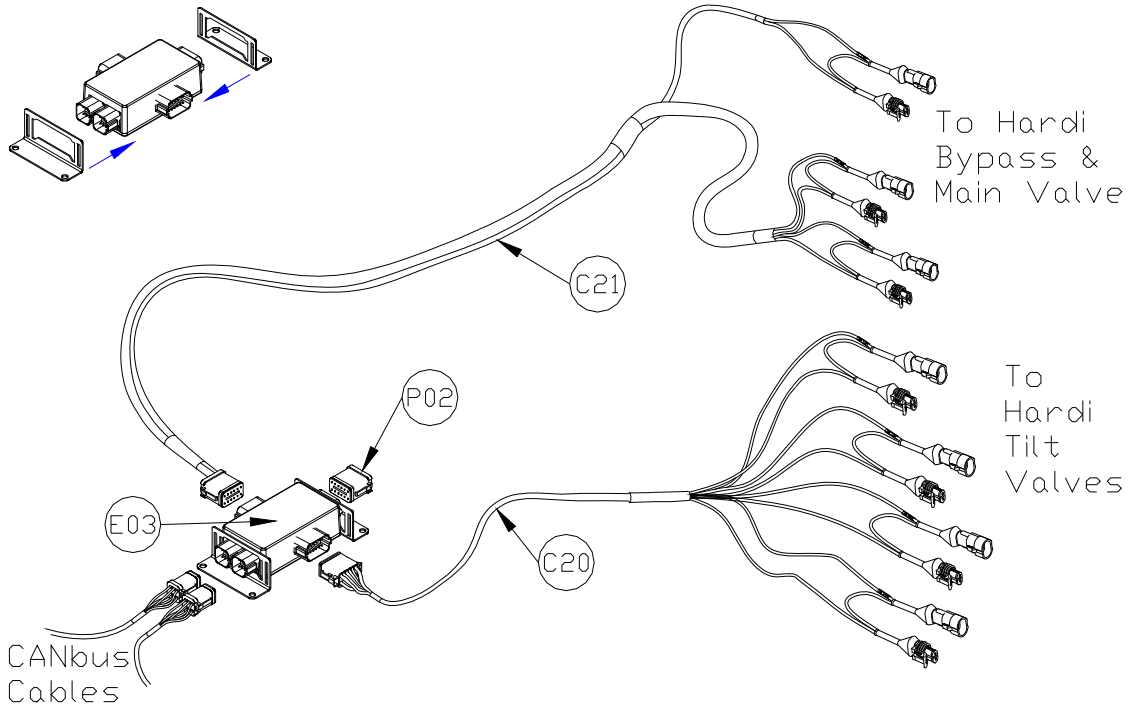

Figure 23: Input Module Connections

6. Connect the 12 pin connector on the main lift interface cable (C21) to the *Thru 1* connector on the side of the input module.

7. Route cable C21 under the sprayer, to the main lift valve.

8. Insert the connectors on the other end of C21 into the main lift connectors on the Hardi solenoids.

9. If the sprayer is equipped with a bypass valve, insert the connector labeled "Aux 1" into the bypass valve connectors. If the sprayer does not have a bypass valve, connect the male and female "Aux 1" connectors together.

9 Connecting the Sensors to the CANbus

1. Route cable C03 from the input module to the 8-way coupler (E11).

2. Connect both roll sensors to the 8-way coupler. Fasten the 8-way coupler to the boom with cable ties.

3. Connect the main lift sensor to the 8-way coupler using cable C02 and a 2-way coupler (E12). Cable C02 and item E12 may not be needed if the 8-way coupler is mounted close enough to the main lift sensor.

4. Connect two cables (C05) to the 8-way coupler and route along the booms to the wing sensors. Follow existing cables and hoses to be sure the cable will not be pinched or stretched.

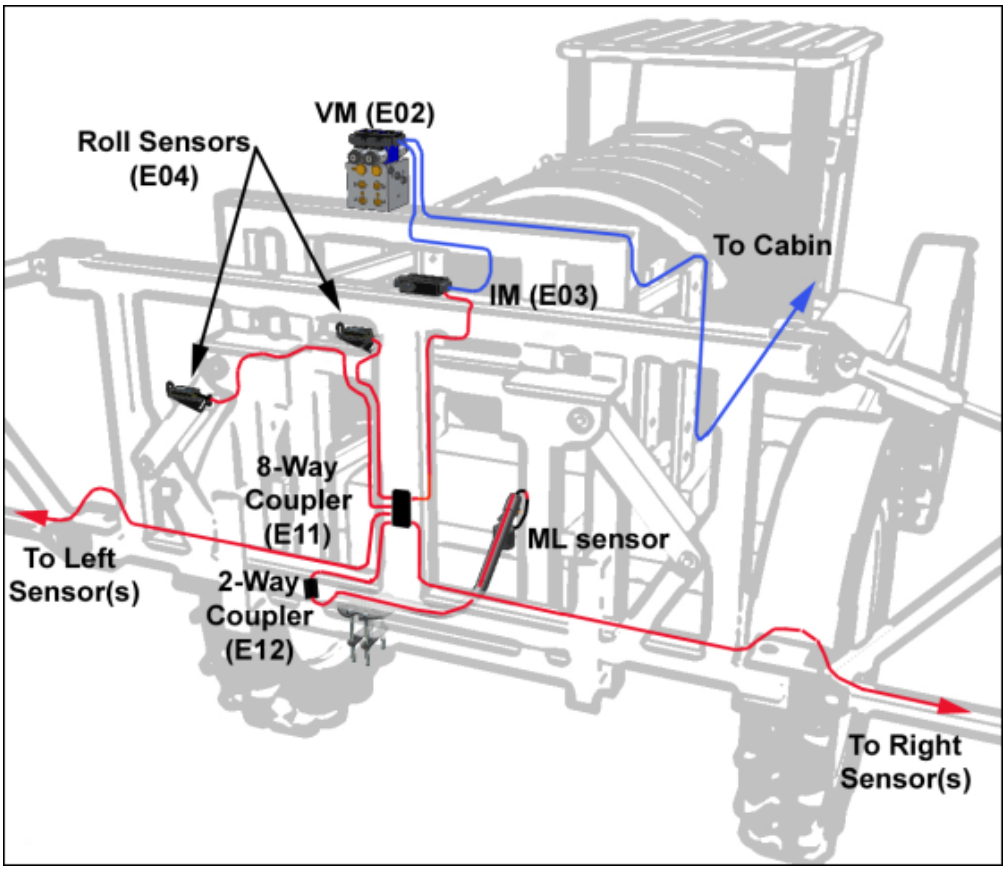

Figure 24: UC5 Module Locations and Cable Connections

5. At the sensor brackets, attach a 2-way coupler with terminator (E20) to the sprayer boom. The 2-way coupler with terminator is the white two way coupler. Plug the sensor and the CANbus cable into the 2-way coupler.

⚠ Important

Ensure that all unused connectors are plugged with the plugs provided.

10 Hydraulic Installation

Warning!

Ensure all pressure has been bled from the system before disconnecting any lines or fittings. Hydraulic pressure will exist on the wing tilt circuits unless the wings are being supported by other means. The hydraulic installation may be performed with the wings in transport position, resting on the ground or with the tilt cylinders fully extended.

Important

Component failure due to oil contamination is not covered under the NORAC UC5 system warranty. It is recommended that a qualified technician perform the hydraulic installation.

Important

Sprayers manufactured after 2012 may have either BSP or flat faced o-ring fittings. Before starting the installation, compare the NORAC kit hydraulics to the sprayer hydraulics to be sure the correct fitting style is supplied. When performing the hydraulic install be sure to follow the section for the correct style of fittings.

For sprayers using BSP fittings with single acting plumbing, see Section 10.1.

For sprayers using BSP fittings with double acting plumbing, see Section 10.2.

For sprayers using flat faced o-ring fittings with single acting plumbing, see Section 10.3.

For sprayers using flat faced o-ring fittings with double acting plumbing, see Section 10.4.

10.1 Single Acting Hydraulic Plumbing for HD07 (BSP Fittings)

1. On a clean surface remove the plastic plugs from the block.

2. Install two 6MB 6MJ (F02) fittings into the "P" and "T" ports on the NORAC block. Tighten to 18 ft-lbs (24 Nm).

3. Insert the two orifices (F01) into the "B" ports with the notch facing out. (**Figure 25**)

4. Install two 6MB 6MJ (F02) fittings into the "B" ports on the NORAC block. Tighten to 18 ft-lbs (24 Nm).

5. Install the 6MBP (F03) plugs into the "A" ports on the NORAC block and tighten to 18 ft-lbs (24 Nm).

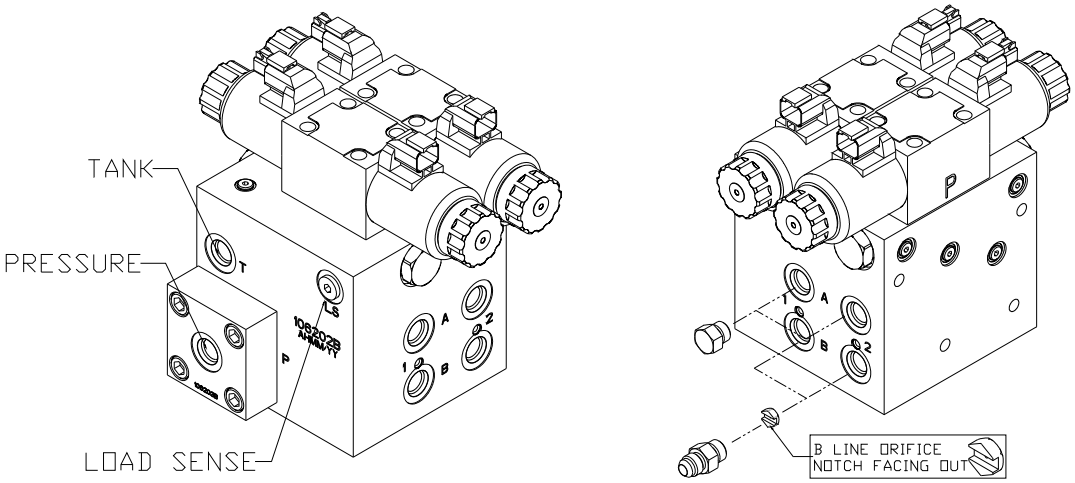

Figure 25: Single Acting NORAC Valve Block Details

Warning!

From this point on in the installation the booms will be inoperative until the hydraulics are fully installed.

6. Mount the NORAC valve as shown in Section 10.5.

7. The plumbing for the hydraulic circuit is shown schematically in **Figure 3**.

8. Install the 90 degree fittings on hoses H02 onto the "B" ports on the NORAC valve block.

9. Route the free ends of the hoses to each of the wing tilt cylinders.

10. Remove the Hardi hoses from the "raise" line (the "B" line) of the cylinder and remove the restricted straight BSPP fittings. (**Figure 26**)

11. Install the 4FBSPPX 6MJ fittings (F04) onto hoses H02. Install NORAC and Hardi hoses onto the 4MBSPPT 4FBSPPRX tee (F05).

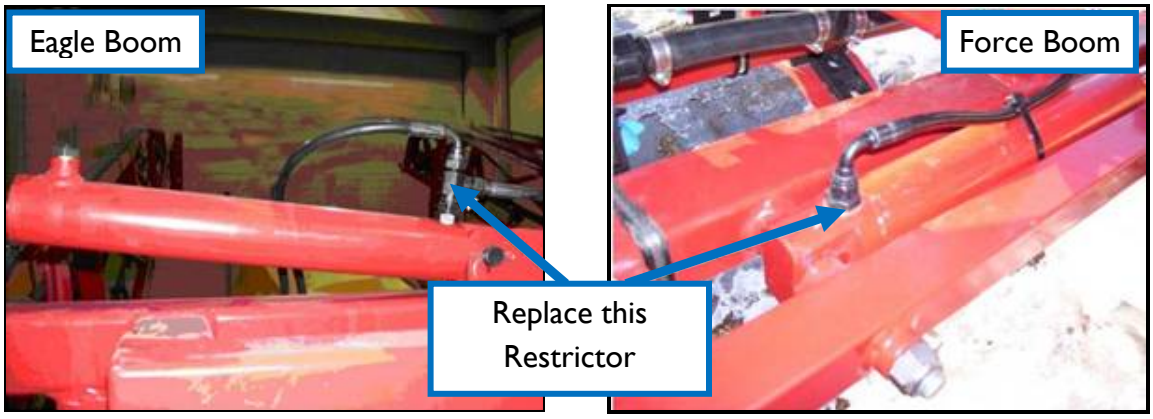

Figure 26: Restrictor to be Replaced on the Tilt Cylinders

12. At the Hardi main valve block, remove the hydraulic hoses that run from the "raise" line of the tilt cylinders to the valve block (**Figure 27**). Remove the fittings from between the hoses and valve block.

13. Install the restrictor that was removed from the wing tilt cylinder between the hoses and the valve block. Install the fittings that were removed from the valve block between the cylinders and tee fittings (F05).

14. Remove the pressure and tank hoses from the Hardi valve block and install the 4MBSPPT 4FBSPPRX tee (F05) between the valve block and hoses. Install the 4FBSPPX 6MJ fittings (F04) onto hoses H01. Connect hoses H01 to each of the tee fittings and route to the NORAC valve block. Install the corresponding hose to the pressure and tank port on the NORAC valve block.

Figure 27: Location of Hoses on Hardi Valve Block

10.2 Double Acting Hydraulic Plumbing for HD07 (BSP Fittings)

1. On a clean surface remove the plastic plugs from the block.

2. Install two 6MB 6MJ (F02) fittings into the "P" and "T" ports on the NORAC block. Tighten to 18 ft-lbs (24 Nm).

3. Insert the two orifices (F01) into the "B" ports with the notch facing out. (**Figure 28**)

4. Install two 6MB 6MJ (F02) fittings into the "B" ports on the NORAC block. Tighten to 18 ft-lbs (24 Nm).

5. Insert the two orifices (F01) into the "A" ports with the notch facing in. (**Figure 28**)

6. Install two 6MB 6MJ (F02) fittings into the "A" ports on the NORAC block. Tighten to 18 ft-lbs (24 Nm).

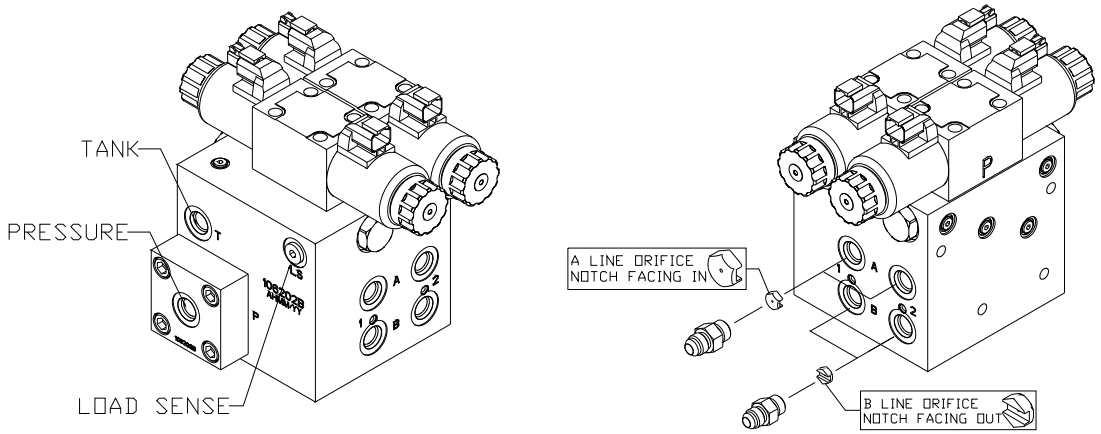

Figure 28: Double Acting NORAC Valve Block Details

Warning!

From this point on in the installation the booms will be inoperative until the hydraulics are fully installed.

7. Mount the NORAC valve as shown in Section 10.5.

8. The plumbing for the hydraulic circuit is shown schematically in **Figure 4**.

9. Install the 90 degree fittings on hoses H02 onto the "A" and "B" ports on the NORAC valve block. Route the free ends of the hoses to each of the wing tilt cylinders.

10. Remove the Hardi hoses from the "raise" line (the "B" line) of the cylinder and remove the restricted straight BSPP fittings. (**Figure 29**)

11. Install the 4FBSPPX 6MJ fittings (F04) onto hoses H02. Install NORAC and Hardi hoses onto the 4MBSPPT 4FBSPPRX tee (F05).

12. Remove the Hardi hoses from the "lower" line (the "A" line) of the cylinder and remove the restricted straight BSPP fittings. (**Figure 29**)

13. Install the 4FBSPPX 6MJ fittings (F04) onto hoses H02. Install NORAC and Hardi hoses onto the 4MBSPPT 4FBSPPRX tee (F05).

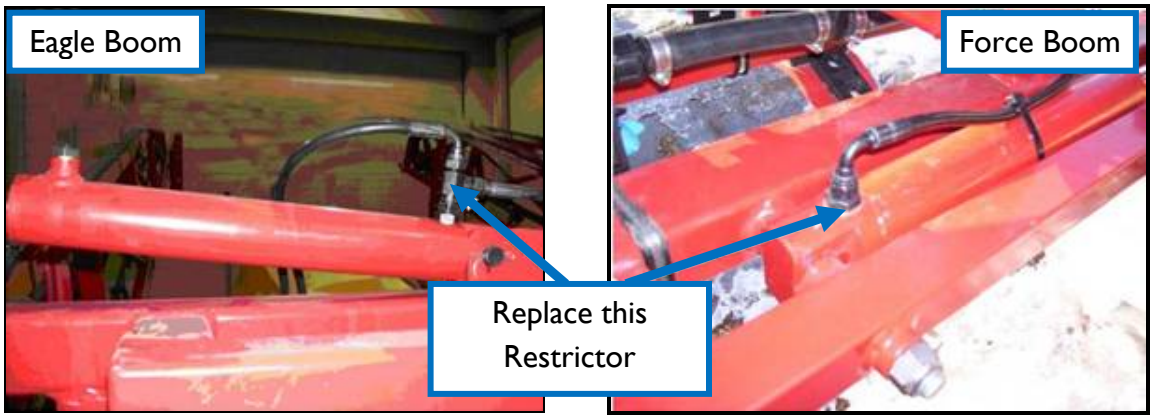

Figure 29: Restrictor to be Replaced on the Tilt Cylinders

14. At the Hardi main valve block, remove the hydraulic hoses that run from the "raise" line of the tilt cylinders to the valve block (**Figure 30**). Remove the fittings from between the hoses and valve block.

15. Install the restrictor that was removed from the wing tilt cylinder between the hoses and the valve block.

16. Install the fittings that were removed from the valve block between the cylinders and tee fittings (F05).

17. Remove the pressure and tank hoses from the Hardi valve block and install the 4MBSPPT 4FBSPPRX tee (F05) between the valve block and hoses. Install the 4FBSPPX 6MJ fittings (F04) onto hoses H01. Connect hoses H01 to each of the tee fittings and route to the NORAC valve block. Install the corresponding hose to the pressure and tank port on the NORAC valve block.

Figure 30: Location of Hoses on Hardi Valve Block

10.3 Single Acting Hydraulic Plumbing for HD12 (Flat Faced O-Ring Fittings)

1. On a clean surface remove the plastic plugs from the block.

2. Install two 6MB 6MOR (F02) fittings into the "P" and "T" ports on the NORAC block. Tighten to 18 ft-lbs (24 Nm).

3. Insert the two orifices (F01) into the "B" ports with the notch facing out. (**Figure 31**)

4. Install two 6MB 6MOR (F02) fittings into the "B" ports on the NORAC block. Tighten to 18 ft-lbs (24 Nm).

5. Install the 6MBP (F03) plugs into the "A" ports on the NORAC block and tighten to 18 ft-lbs (24 Nm).

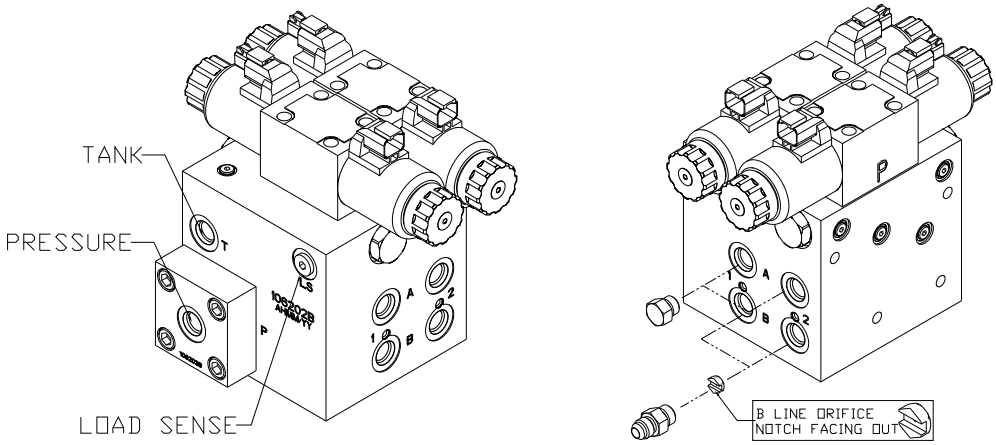

Figure 31: Single Acting NORAC Valve Block Details

Warning!

From this point on in the installation the booms will be inoperative until the hydraulics are fully installed.

6. Mount the NORAC valve as shown in Section 10.5.

7. The plumbing for the hydraulic circuit is shown schematically in **Figure 3**.

8. Install the 90 degree fittings on hoses H02 onto the "B" ports on the NORAC valve block.

9. Route the free ends of the hoses to each of the wing tilt cylinders.

10. Remove the Hardi hoses from the "raise" line (the "B" line) of the cylinder and remove the restricted straight fittings. (**Figure 26**)

11. Install the 4FOR 6MOR fittings (F04) onto hoses H02. Install NORAC and Hardi hoses onto the 4FORXR 4MORT tee (F05).

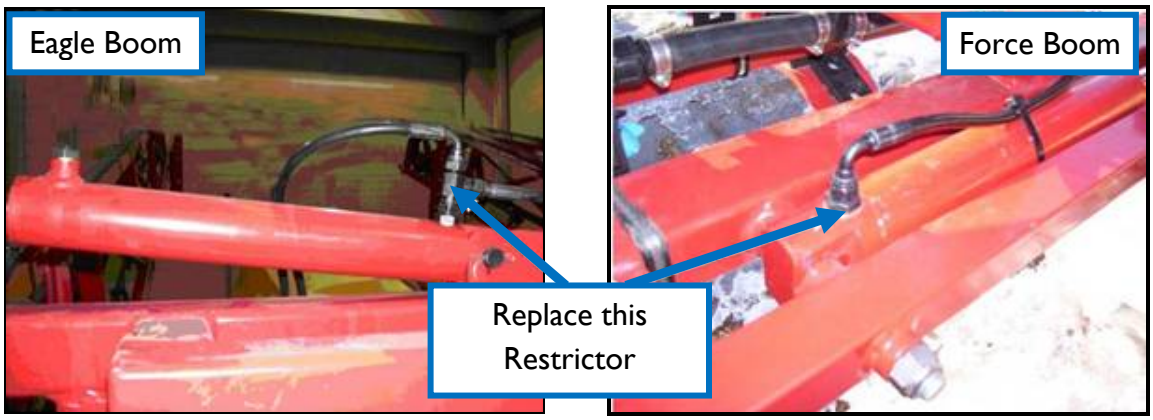

Figure 32: Restrictor to be Replaced on the Tilt Cylinders

12. At the Hardi main valve block, remove the hydraulic hoses that run from the "raise" line of the tilt cylinders to the valve block (**Figure 33**). Remove the fittings from between the hoses and valve block.

13. Install the restrictor that was removed from the wing tilt cylinder between the hoses and the valve block. Install the fittings that were removed from the valve block between the cylinders and tee fittings (F05).

14. Remove the pressure and tank hoses from the Hardi valve block and install the 4FORXR 4MORT tee (F05) between the valve block and hoses. Install the 4FOR 6MOR fittings (F04) onto hoses H01. Connect hoses H01 to each of the tee fittings and route to the NORAC valve block. Install the corresponding hose to the pressure and tank port on the NORAC valve block.

Figure 33: Location of Hoses on Hardi Valve Block

10.4 Double Acting Hydraulic Plumbing for HD12 (Flat Faced O-Ring Fittings)

1. On a clean surface remove the plastic plugs from the block.

2. Install two 6MB 6MOR (F02) fittings into the "P" and "T" ports on the NORAC block. Tighten to 18 ft-lbs (24 Nm).

3. Insert the two orifices (F01) into the "B" ports with the notch facing out. (**Figure 34**)

4. Install two 6MB 6MOR (F02) fittings into the "B" ports on the NORAC block. Tighten to 18 ft-lbs (24 Nm).

5. Insert the two orifices (F01) into the "A" ports with the notch facing in. (**Figure 34**)

6. Install two 6MB 6MOR (F02) fittings into the "A" ports on the NORAC block. Tighten to 18 ft-lbs (24 Nm).

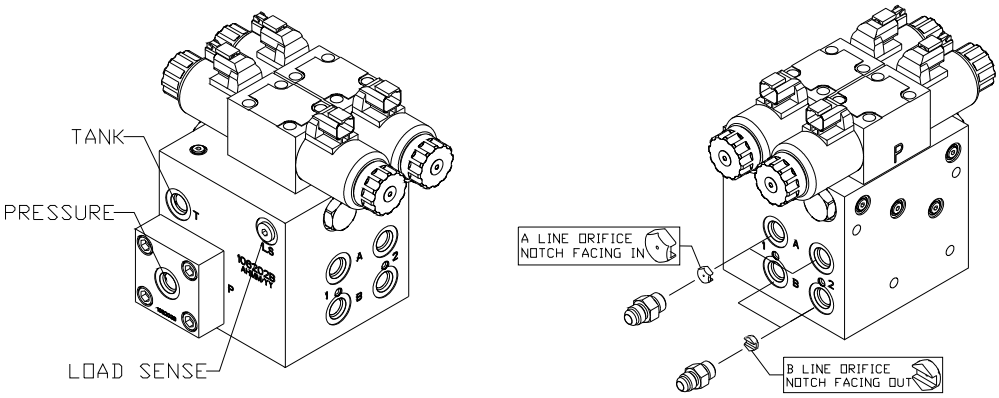

Figure 34: Double Acting NORAC Valve Block Details

Warning!

From this point on in the installation the booms will be inoperative until the hydraulics are fully installed.

7. Mount the NORAC valve as shown in Section 10.5.

8. The plumbing for the hydraulic circuit is shown schematically in **Figure 4**.

9. Install the 90 degree fittings on hoses H02 onto the "A" and "B" ports on the NORAC valve block. Route the free ends of the hoses to each of the wing tilt cylinders.

10. Remove the Hardi hoses from the "raise" line (the "B" line) of the cylinder and remove the restricted straight BSPP fittings. (**Figure 35**)

11. Install the 4FOR 6MOR fittings (F04) onto hoses H02. Install NORAC and Hardi hoses onto the 4FORXR 4MORT tee (F05).

12. Remove the Hardi hoses from the "lower" line (the "A" line) of the cylinder and remove the restricted straight fittings. (**Figure 35**)

13. Install the 4FOR 6MOR fittings (F04) onto hoses H02. Install NORAC and Hardi hoses onto the 4FORXR 4MORT tee (F05).

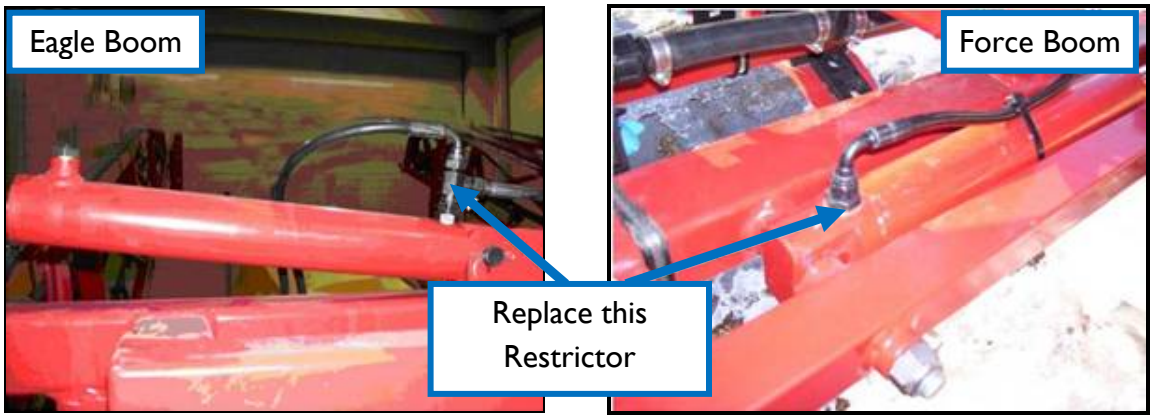

Figure 35: Restrictor to be Replaced on the Tilt Cylinders

14. At the Hardi main valve block, remove the hydraulic hoses that run from the "raise" line of the tilt cylinders to the valve block (**Figure 30**). Remove the fittings from between the hoses and valve block.

15. Install the restrictor that was removed from the wing tilt cylinder between the hoses and the valve block.

16. Install the fittings that were removed from the valve block between the cylinders and tee fittings (F05).

17. Remove the pressure and tank hoses from the Hardi valve block and install the 4FORXR 4MORT tee (F05) between the valve block and hoses. Install the 4FOR 6MOR fittings (F04) onto hoses H01. Connect hoses H01 to each of the tee fittings and route to the NORAC valve block. Install the corresponding hose to the pressure and tank port on the NORAC valve block.

Figure 36: Location of Hoses on Hardi Valve Block

10.5 Valve Block Mounting

⚠ Important

Ensure that no hydraulic components will interfere with any sprayer parts or be pulled tight at any time.

⚠ **The recommended mounting location is on the rear of the boom main section near the Hardi valve block.**

1. A suitable mounting location for the valve block is illustrated in **Figure 37**.

2. Insert the threaded rod into the block and use a hex nut to hold the rod. The block holes are 3/8" NC-1" deep. If bolts are used instead of the threaded rod, ensure the bolts thread in at least 3/8".

3. Use the remaining hardware to secure the block to the sprayer.

4. Cut off excess threaded rod, if necessary.

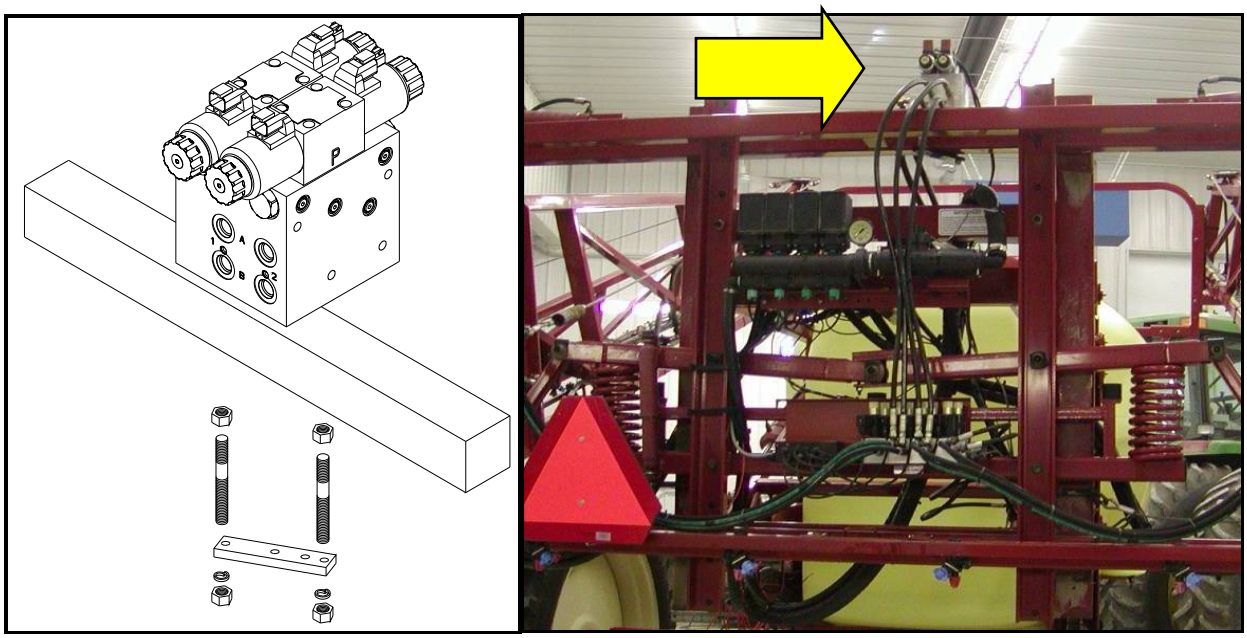

Figure 37: Valve Block Mounting

11 Software Setup

1. Start up the sprayer and test the sprayer's functionality. The display terminal does not need to be powered on for the original boom function switches to operate. Unfold the booms and raise/lower each boom and the main section.

Important

Confirm that the cabling and hoses are agreeable to the entire range of motion.

2. If any functions do not work, review the hydraulic and electrical portions of this manual to check for proper installation.

3. Turn on the power for the display terminal using the switch on the side.

4. The procedure for the installation of the UC5 Spray Height Control system is now complete. Begin the AUTOMATIC SYSTEM SETUP procedure as described in the UC5 Spray Height Control Operator's Manual.

5. For optimal performance of the UC5 system, there should be very little play at the hitch clevis. The addition of polymer washers can help tighten up this connection (**Figure 38**).

Figure 38: Hitch Point

12 Cable Drawings

12.1 ITEM C01: 43220-10 - CABLE UC5 NETWORK 14 AWG - 10M

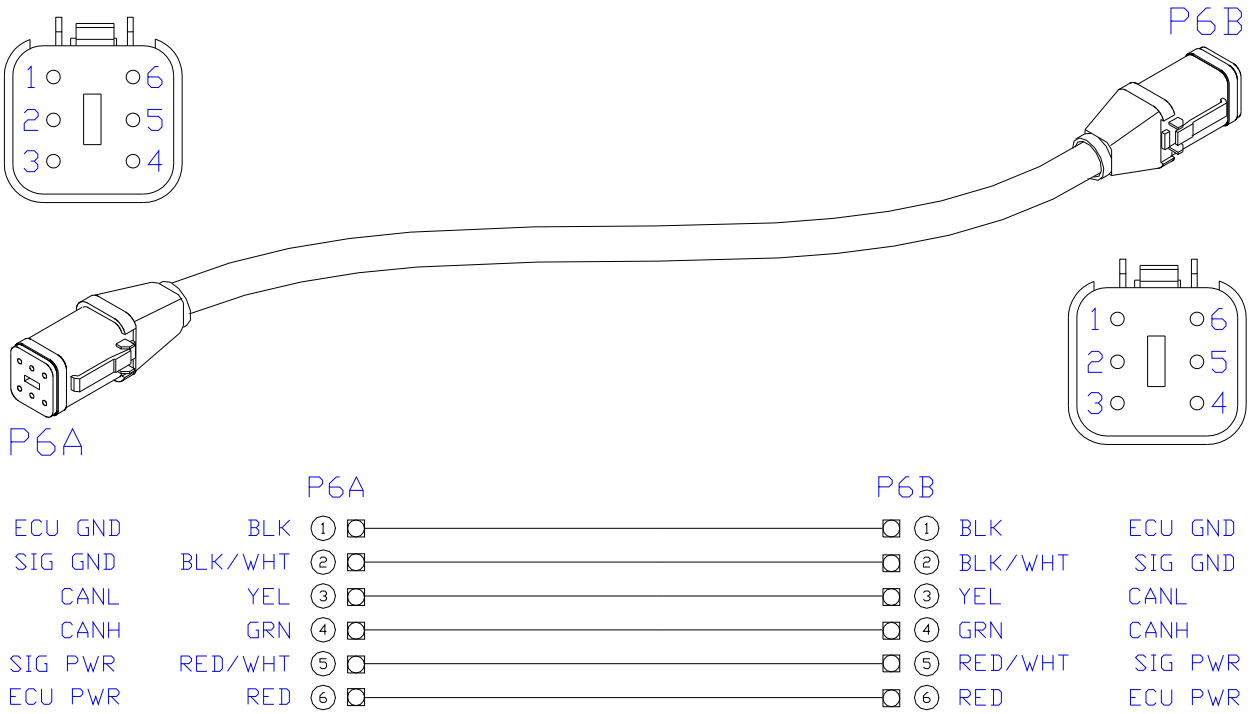

12.2 ITEM C02: 43220-01 - CABLE UC5 NETWORK 14 AWG - 1M

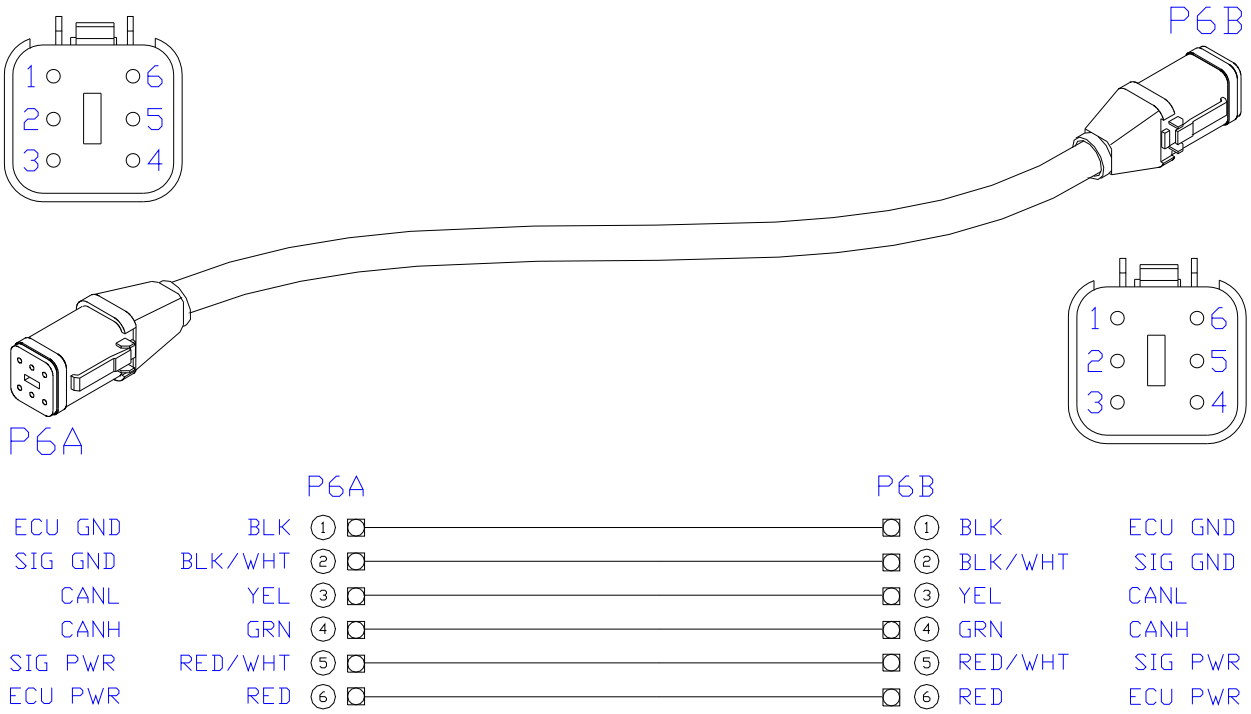

12.3 ITEM C03: 43220-03 - CABLE UC5 NETWORK 14 AWG - 3M

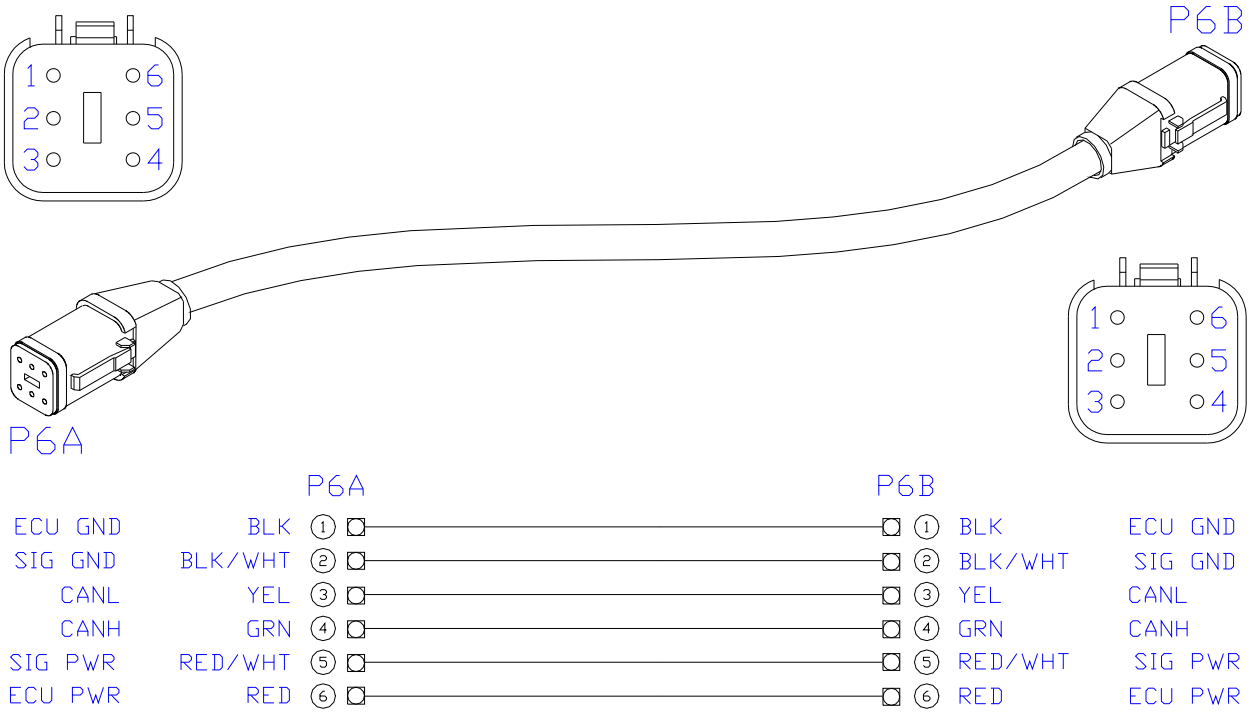

12.4 ITEM C05: 43210-20 - CABLE UC5 NETWORK 18 AWG - 20M

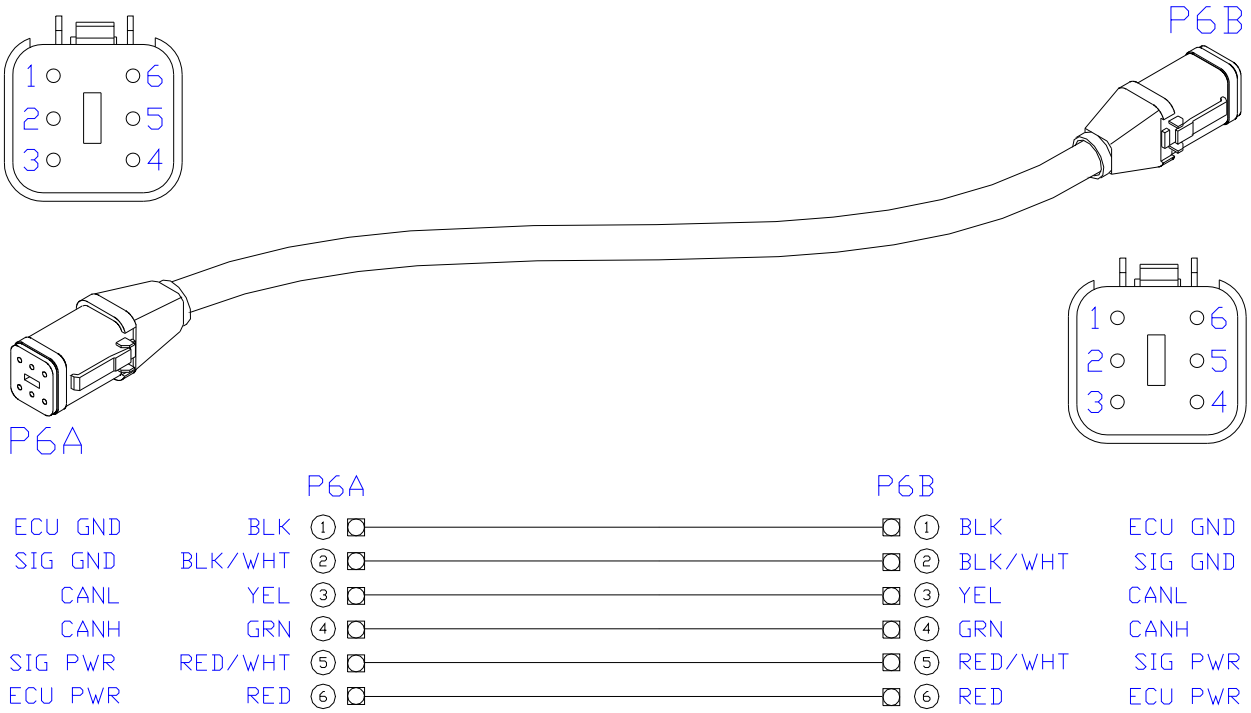

12.5 ITEM C10: 43230-04 – CABLE UC5 VALVE DT TO DT

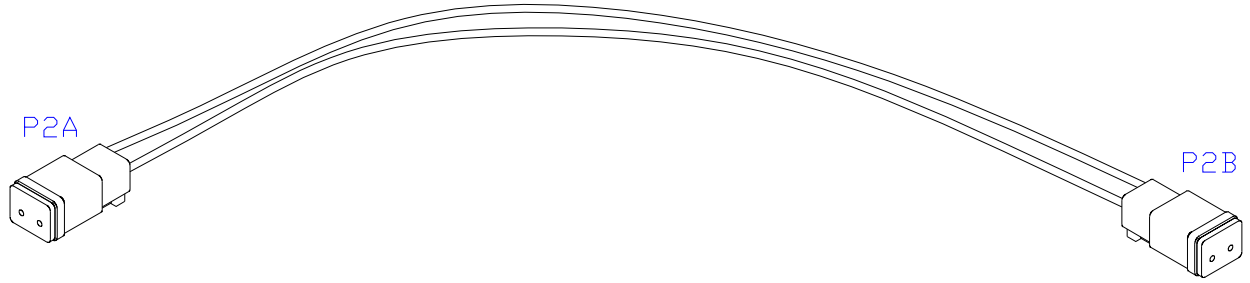

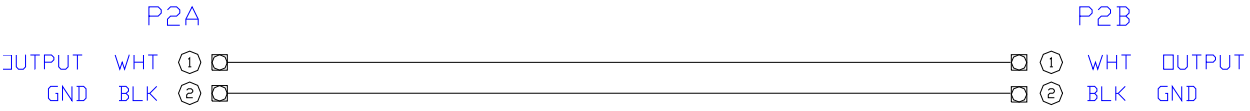

12.6 ITEM C20: 43240-08 – CABLE UC5 INTERFACE TILT AMP (SUPERSEAL)

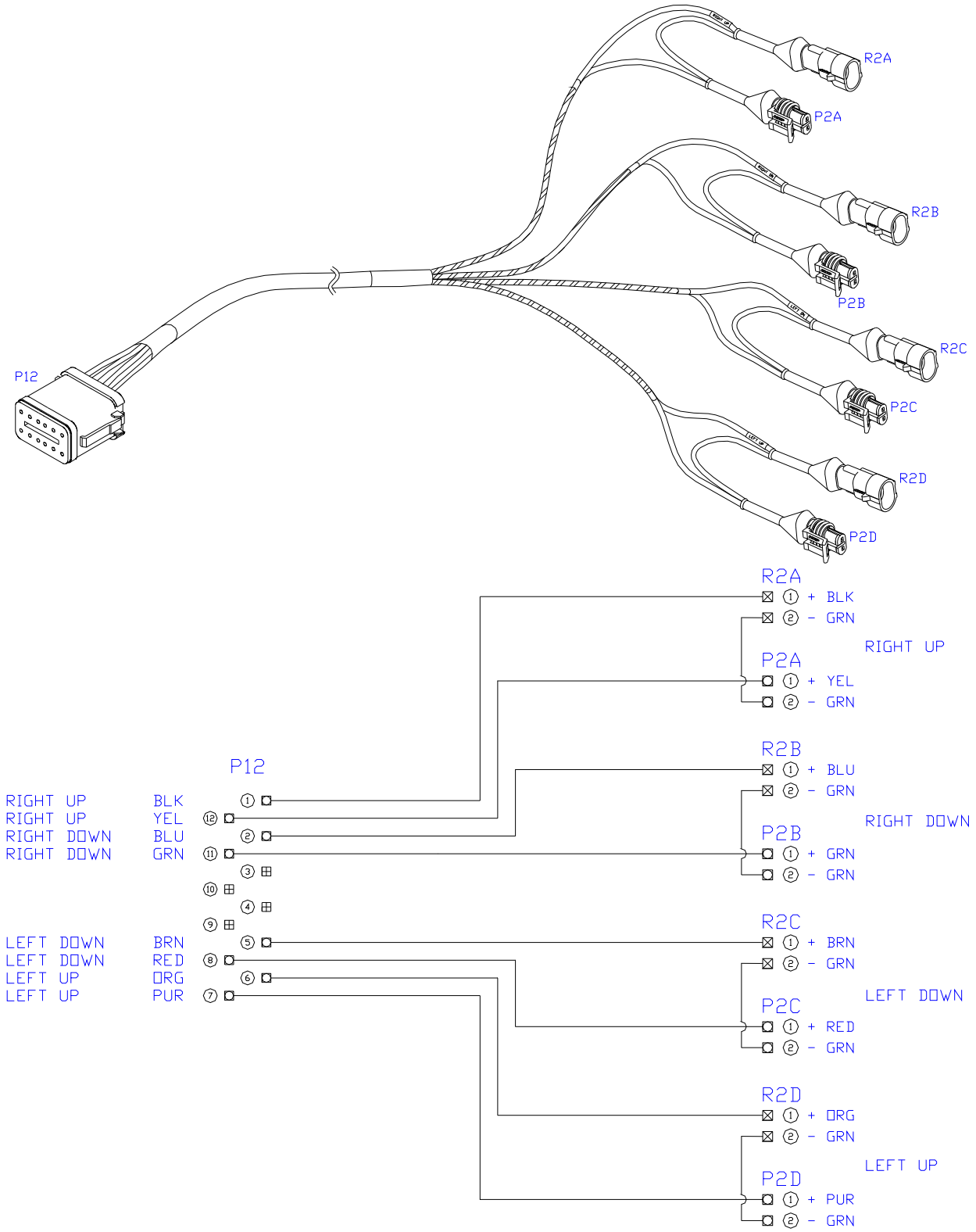

12.7 ITEM C21: 43240-09 – CABLE UC5 INTERFACE MAIN AMP (SUPERSEAL 240" WITH BYPASS)

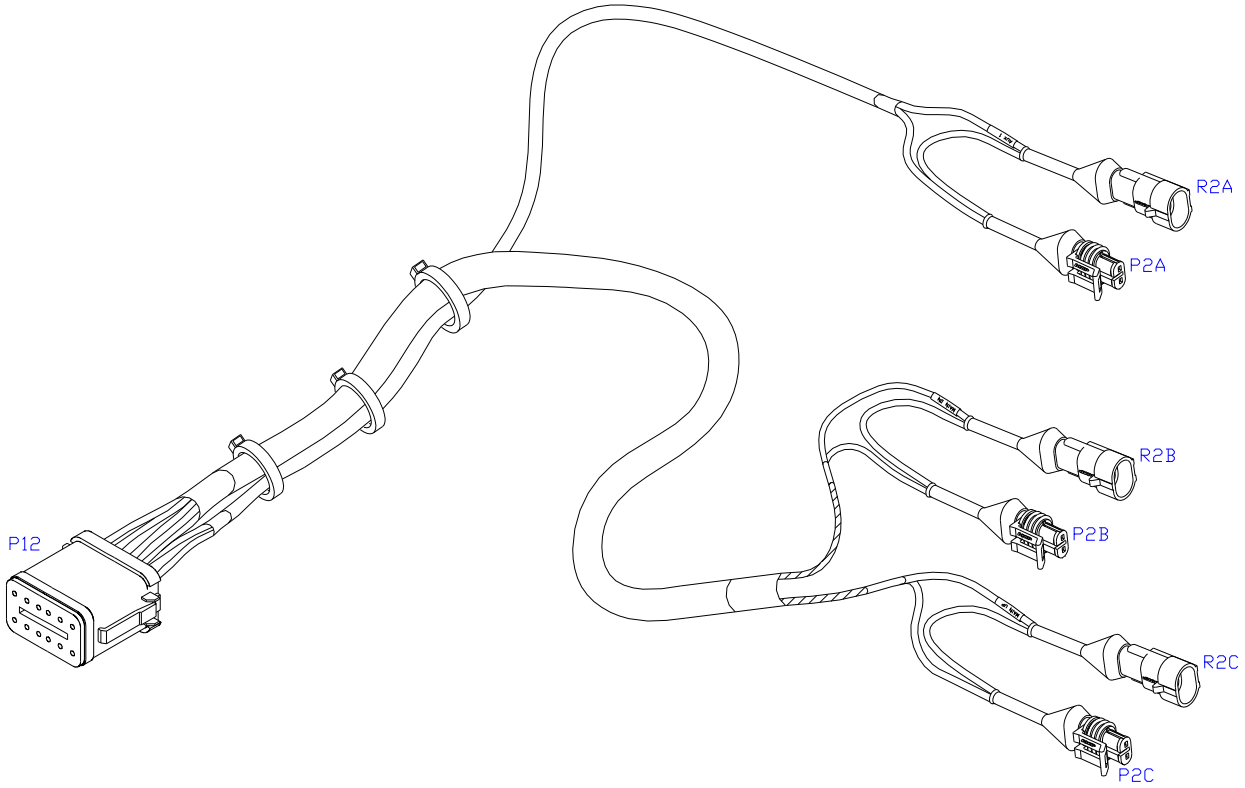

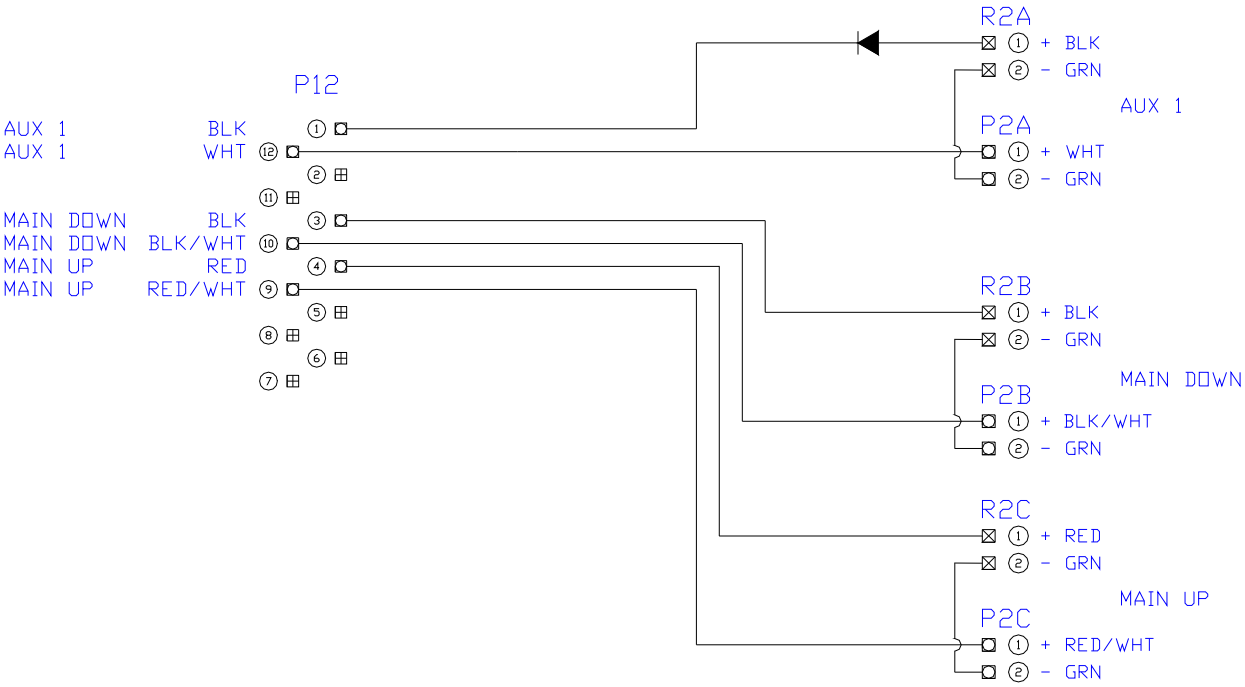

12.8 ITEM C30: 43250-06 – CABLE UC5 BATTERY PIGTAIL FUSED

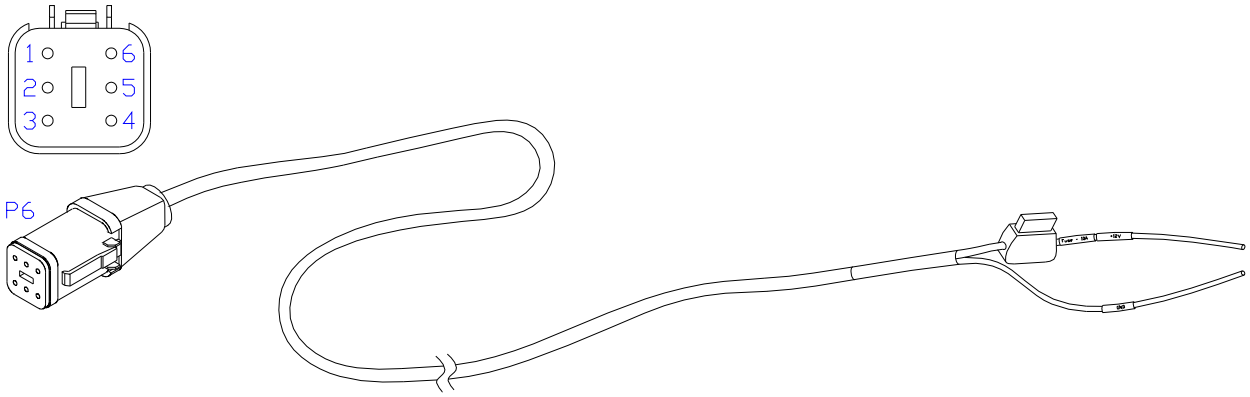

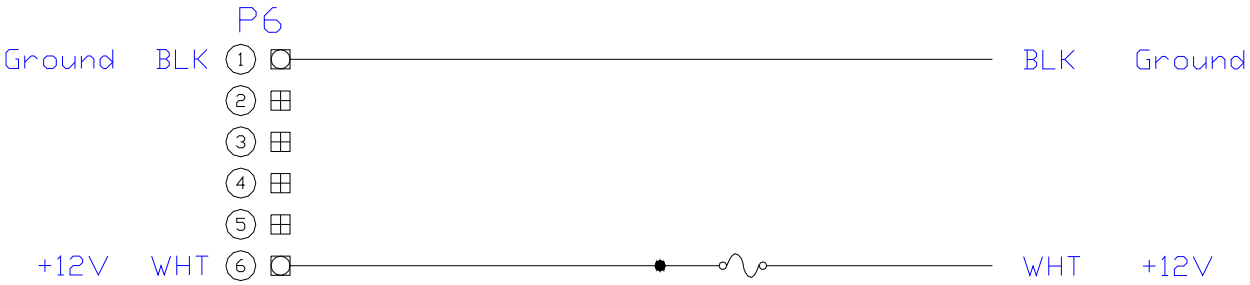

TOPCON Agriculture Canada
3702 Kinnear Place
Saskatoon, SK S7P 0A6

TOPCON Agriculture Americas
W5527 Hwy 106
Fort Atkinson, WI 53538

TOPCON Precision Agriculture Europe
Avenida de la industria,
35, Tres Cantos, España
Spain

Support
Phone: 888 979 9509
E-mail: tasupportn@topcon.com
Web: www.norac.ca